# IL 943

# SERVICE MANUAL

## P/N 80943-25

Digitized by the Internet Archive
in 2026 with funding from
University of Toronto

https://archive.org/details/uoftmanuals012

October '86

Instrumentation
Laboratory
S.p.A.

# IL 943
# SERVICE
# MEETING
# PROMEMORIA

PRINTED IN ITALY, COPYRIGHT 1986, ALL RIGHTS RESERVED

Instrumentation Laboratory S.p.A. Viale dell'Industria 3 - 20037 Paderno Dugnano

**Instrumentation Laboratory S.p.A.**

# INTRODUCTION

We now have some 3 to 4 years experience with the IL FF 943.
In the course of these years we have been able to confirm the analytical performance of the instrument to specification and where necessary we have introduced modifications to make more easily obtainable or to improve the specified performance. For your convenience we have enclosed herewith the service notes detailing the changes.

In the past, including the recent past, there have however been few, but repetitive, indications of two types of problem, drift and noise, which have given to field service engineers some difficulty.

The results of our field work has led to the qualification of these problems and to improvements in components and maintenance procedures. Section two indicates the most recent improvements for some of the IL 943 components.

With regard to maintenance, field experience has indicated that most of the times problems were generated by a lack of Operator's maintenance actions together with not enough attention paid by the field service engineers to important procedures and adjustments which 943 needs.

The IL 943 is really a different FF than the previous 243-543 family to which most of us were and are still used to. Sample size and the use of micro cups (500 µl versus 2 ml) together with the high degree of automation, including the sampler, make the difference.

**We are convinced that a properly maintained instrument will give years of satisfactory performance to the User.**

Proper maintenance, however, implies that both user and service engineers must know and carry out the necessary limited maintenance, or resetting in a prescribed way and with the due level of care.
**The service engineers also have the very important task of training the users as well as of verifying that maintenance is properly performed.**

In these documents we provide the ground rules which we hope will make both the users and the service personnel more confident on the subject.
There is nothing basically new in these procedures except the method of presentation which includes useful tips based on our experience when dealing with customers who have doubts about the analytical performance of their instrument.

# SUMMARY


| | |
|---|---|
| SECTION ONE | SYSTEM INSTALLATION |
| SECTION TWO | MOST RECENT SYSTEM IMPROVEMENTS |
| SECTION THREE | GAS PLUMBING ASSY |
| SECTION FOUR | BURNER ASSY |
| SECTION FIVE | GAS TUBE |
| SECTION SIX | ATOMIZER ASSY |
| SECTION SEVEN | MAINTENANCE KIT |
| SECTION EIGHT | RECOMMENDED ACTIONS AT SERVICE CALL |
| SECTION NINE | USER'S RECOMMENDED OPERATION (CHECK OUT) |
| SECTION TEN | SERVICE NOTES |

## SECTION ONE - SYSTEM INSTALLATION

### 1.1 INSTALLATION

The following notes do not supercede those included in the Service and Operator's manuals, but they constitute a review of possible "critical" items, at installation, as raised from our experience.

### 1.2 AIR REQUIREMENTS

Compressed air

Operation of the IL 943 requires air supplied at a minimum supply pressure in the range between 1.7 atm (25 psi) and 4.0 atm (58 psi) and with a minimum volume flow rate of 15 l/min.
The air must be clean and free from moisture and oil.
IL SpA supplies a suitable compressor (p/n 67233-00)

Manifold air

If a laboratory compressed air line exists with adeguate stability and capacity (taking account of other users) then it can be used, together with suitable filters to remove oil and moisture (filtering capacity 20 u).
A local regulator on this assembly should be set to deliver about 30 psi (2 atm, 189 kPa).

### 1.3 GAS REQUIREMENTS

If IL propane gas cyclinders are not to be used, the propane fuel for the IL 943 Flame Photometer should be at least 99% pure with a dew point of less than -23°C at one atmosphere, and must contain less than 50 ppm sulphur.
The optimum gas pressure provided at the instrument rear panel is 2.5 atm (236 kPa) ± 0.2; a local regulator should be used.

**WARNING**

- **The gas pressure presented at the instrument rear panel must not exceed 4 atm (377 kPa).**
- **Commercial grade propane should not be substituted for instrument grade fuel.**
- **Commercial grade propane contains significant concentrations of higher boiling hydrocarbons and sulphur impurities which alter the flame temperature and deposit in the plumbing system and on the burner.**

### 1.4 SPARK ELECTRODE

When installing the glass chimney, as described in service manual section 5.1.5, attention must be paid to the spark electrode position.

Check that the tip of the spark electrode does not invade the "flame zone" on the burner assy as shown by the figure below.

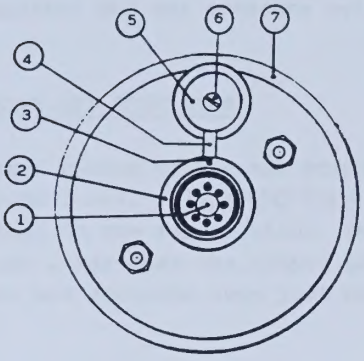


1. Burner assy
2. Air duct
3. Spark electrode
4. Spark electrode insulator
5. Spark electrode housing
6. Spark electrode locking screw
7. Chimney mounting ring

**WARNING**

**The tip of the spark electrode must not protrude too far (beyond the air duct).**

A mispositioned spark electrode which touches the flame during operation will, even with correct flame setting, produce noise indication due to interferences generated by the "impurities" released from the overheated electrode.

## 1.5 RECOMENDATIONS AT SWITCH ON

- Attention must be paid when mounting the sample probe.
  Remember that the tip of the sample probe must dip into the solution of mixing cup to a depth of 0.5 to 1 mm as described in service manual section 5.1.5.
- After the first Flame ON and after filling the waste tube, leave the instrument for at least 30' aspirating a solution containing one part of serum and ten parts of Cs diluent.
- Check that sample line is free from obstruction before carrying with the aspiration rate adjustment.
- After the instrument has been working for at least one hour check again the answers of the preamplifier box using one part of a calibrating solution 140/5 or 140/5/1 diluted with 100 parts of Cs solution.
  All channels(expecially lithium) have variations depending on the condition and temperature of flame.

  **NOTE**

  **A proper installation and User's training will reduce the possibility of facing with possible problems, as above, and will also facilitate future communication between customer and service personnel.**

## SECTION TWO - MOST RECENT SYSTEM IMPROVEMENTS

Further to recent experience regarding occasional sample questionable data, operating the 943 with the gas cylinder almost empty a new style of gas shut-off regulator and gas pressure switch have been introduced.

### 2.1 GAS SHUT-OFF REGULATOR

The part number of the new propane gas hose and valve assy remains unchanged (98973-00). IL0009897 3-00 $1100.6/CND (dec 11/03)
As shown in the figure below, the body of the regulator has been modified in such a way that the output gas pressure (typ. 2.5 atm) is now more stable and accurate even just before or after a fuel cylinder replacement.

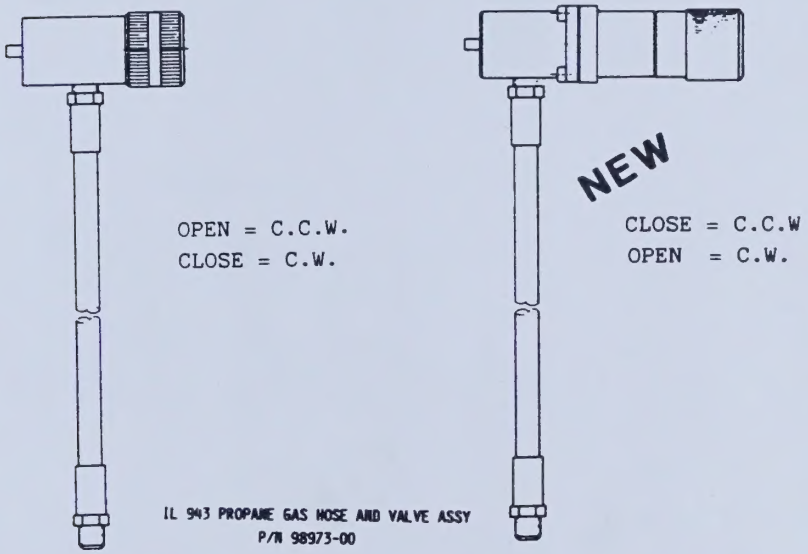


IL 943 PROPANE GAS HOSE AND VALVE ASSY
P/N 98973-00

**N O T E:**

**ATTENTION MUST BE PAID TO AVOID POSSIBLE DAMAGE WHEN OPERATING WITH THE NEW STYLE REGULATOR SINCE THE THREAD OF THE STOPCOCK HAS BEEN REVERSED. THE OPEN/CLOSE SENSE IS INDICATED ON THE TOP OF THE KNOB.**

The introduction of the above has been combined with the release of a new gas pressure switch described below.

## 2.2 GAS PRESSURE SWITCH

The new device has a threshold (1.8 + 2.0 atm), stricter than in the past (1.3 atm) to be factory preset.
The new setting will result closer to the gas regulator working output pressure (2.5 atm).
This reduces considerably the chance of drift of sample data due to an almost empty fuel cylinder.

**N O T E** Service concerns are provided in the section titled GAS PLUMBING ASSY.

**WARNING**

**DO NOT USE NEW STYLE GAS PRESSURE SWITCHES ON SYSTEMS EQUIPPED WITH FORMER TYPE OF SHUT-OFF GAS REGULATOR.**
**THIS COULD GENERATE A NO GAS ALARM DUE TO UNEXPECTED ACTIVATION OF THE PRESSURE SWITCH.**

## SECTION THREE - GAS PLUMBING ASSY

As detailed in the service note n° 21 the gas plumbing assy will be equipped with a new pressure switch.

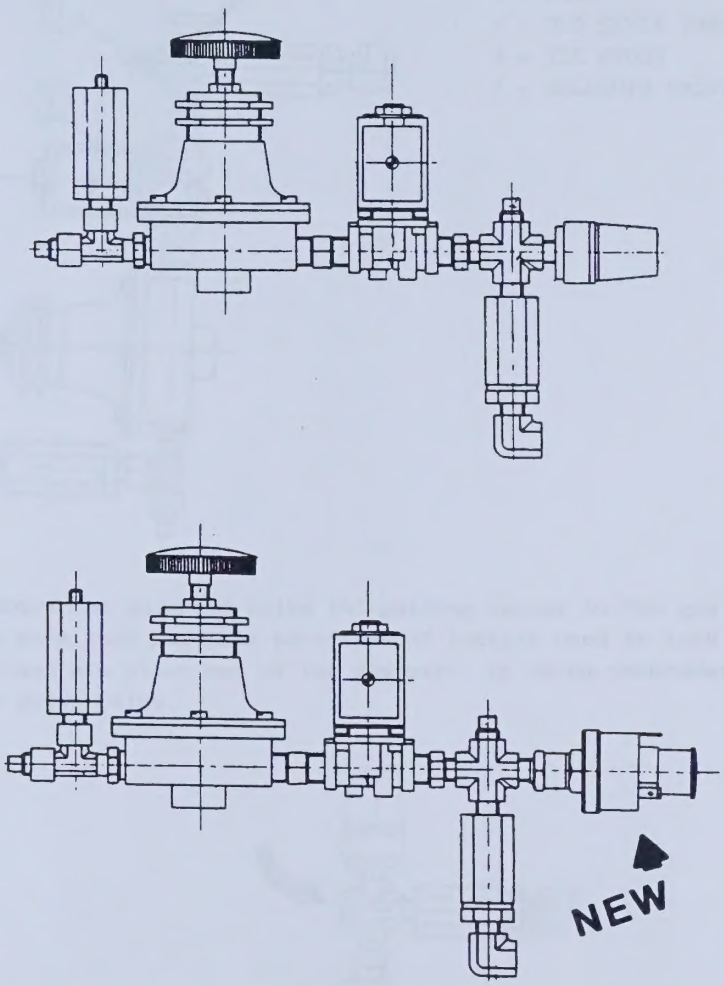


The part number of the gas plumbing assy remains unchanged.
Updating of the old assembly is possible using the kit p/n 70727-05. IL00070727-05
The kit includes the new pressure switch and an extension cable needed for the modification. $187.20CDN
The above modification can be executed on the Customer premises proceding as follows:

- Be sure the system is OFF and the fuel stopcock is locked.
  The following steps can be carried out with the gas plumbing assy left in place.

1) Remove the plug (1) from the tee cross (3).

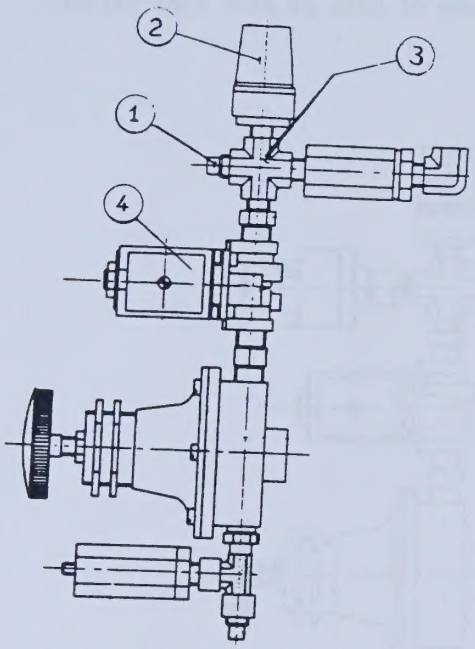


1 = PLUG
2 = OLD STYLE PRESSURE SWITCH
3 = TEE CROSS
4 = SOLENOID VALVE

2) Remove the solenoid valve (4) gaining access to the gas path.
3) Be sure that possible particles of loctite used to lock the plug thread are blown out of the gas path, by using compressed air, as shown below.

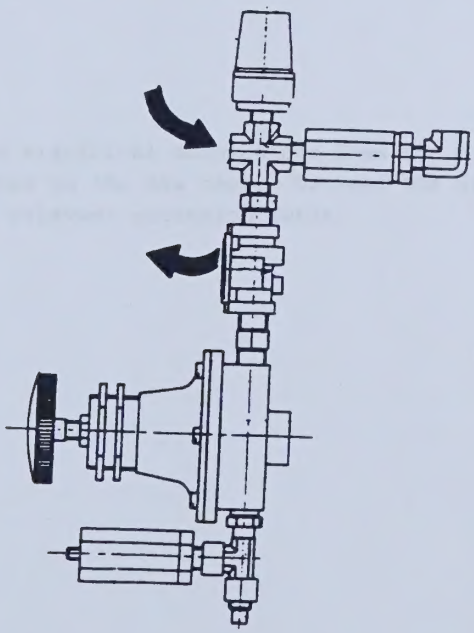

4) Rebuild the solenoid valve then fit the new pressure switch to the vacant port of the tee cross.
Teflon tape must be used to ensure the best sealing on the thread.

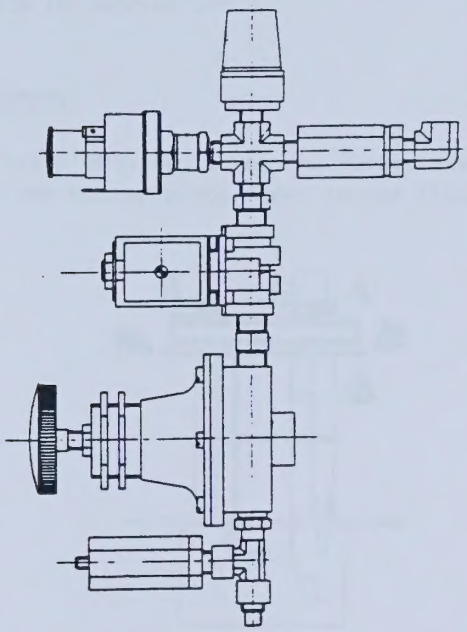

5) Remove the electrical connections from the old pressure switch and connect them to the new device between the pins nr. 1 and nr. 4 by using the relevant extension cable.

## SECTION FOUR - BURNER ASSY

The burner area may be considered as the heart of the flame photometer and it should be carefully handled to avoid possible problems to the correct flame performance.
The following are some critical points to be considered whenever a maintenance and/or troubleshooting is carried out.

### 4.1 BURNER REPLACEMENT

Care must be taken when replacing the burner assy preventing possible distorsion of the burner plate shown in the figure below.

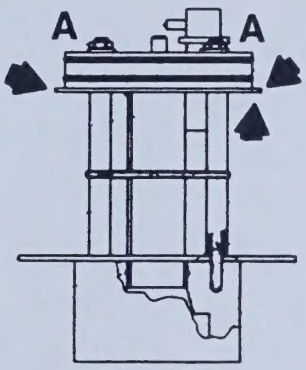


This could happen if the two nuts (A) are tightened too much.
The nuts should be tightened sufficiently to preset rotary movement of the upper assembly.
A bended or distorted plate may change the reference surface plate where the burner fits so that the position of the flame with respect to the photodiodes may change.
Moreover the air duct providing the air column which keeps the flame stable could be effected thus losing part of the benefits of this design.

### 4.2 CHIMNEY SCREEN

The chimney screen should be periodically checked and replaced if there is any sign of the holes in the mesh, a three montly basis is recommended to avoid excessive wear causing possible noise due to particles dropping into the flame.
The user should be reminded of this on the occasion of a service call.

### 4.3 SPARK ELECTRODE

The user should be warned about possible misplacement of the spark electrode when cleaning the burner using a stiff fibre brush.
Problems could be produced as indicated in System Installation section.

## SECTION FIVE - GAS TUBE

When servicing the gas plumbing and/or atomizer care must be taken in handling the gas tube assy (see figure).
Reassembling a gas tube attention must be paid to the correct position of the tube itself which must axially match both fittings (gas plumbing and atomizer) without any bending.
When replacing the gas tube proceed as follows:

1. Insert the gas tube as far as possible into the gas orifice and screw on the nut finger tight.
2. Insert, without bending, the gas tube into the gas plumbing as for as it will go and screw on the nut finger tight.

**NOTE 1** **If the gas tube will not enter the gas plumbing without bending loosen the gas plumbing fixing screws (4 off) to permit vertical movement.**

**NOTE 2** **If the gas tube will not fit right into the plumbing horizontally, loosen the two upper fixing screw as in note 1 and the gas regulator fixing nut (38 mm).**

3. Tighten any gas plumbing mounting screws, if necessary, and lock the gas tube nuts by giving them a half turn with an 8 mm spanner.

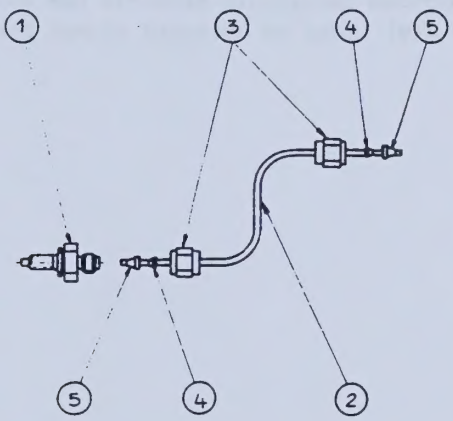


In case of misplacement damage could be provided to the ferules when tighting the nuts (3) generating a leakage in the gas pathway affecting the analytical performance.
Moreover either the ferules (4), (5) and gas capillary holder (1) must not show any sign of stress (e.g. cracks), in such a case the replacement of all items involved is advisable.

## SECTION SIX - ATOMIZER ASSY

In addition to the normal maintenance (e.g. cleaning) particular attention must be paid to the distance between sample injector (1) and air capillary holder (2) tips as shown in the figure (dimension A).

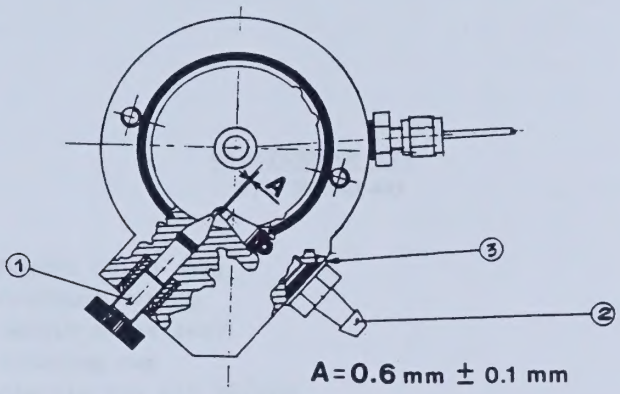


This adjustment is made by means of the laminated shim of the air capillary (3) (p/n 56044-08).
To avoid possible oxidation and minimize biological material deposits we strongly recommend that the tefloned sample injector be used. (p/n 82776-00).
See service note 943-18.

## SECTION SEVEN - MAINTENANCE KITS

### MAINTENANCE KIT
P/N 70749-00

| | | |
|---|---|---|
| 97337-00 | Needle brush assy | 2 |
| 73289-01 | Urethane tubing | 1 meter |
| 97334-00 | Sample probe assy | 1 |
| 67987-00 | Spinning cup | 1 |
| 65183-10 | Plastic tip kit 10/pkg | 1 |
| 97335-00 | Tip needle assy | 1 |
| 99128-00 | Sample tube | 1 meter |
| 99095-01 | Waste tube | 2 meter |
| 20168-00 | Chimney screen | 1 |
| 20161-00 | Burner screen | 1 |
| 70951-01 | Spark electrode | 1 |
| 70951-02 | Spark electrode insulator | 1 |
| 64252-10 | O-Ring air orifice | 1 |
| 64252-03 | O-Ring air/sample orifices | 2 |
| 64251-02 | O-Ring atomizer | 1 |
| 64252-29 | O-Ring atomizer | 1 |
| 64252-09 | O-Ring gas orifice | 1 |
| 71784-06 | Spare part label | 1 |

## SECTION EIGHT - RECOMMENDED ACTIONS AT SERVICE CALL

### 8.1 SERVICE CALL

The following notes do not supercede the routine check out and adjustment procedures given in the service manual, to which reference should be made for details, but they outline all those subjects which should be clearly explained to the User. We strongly recommend, however, the following of this procedure when facing a customer who is doubtful about the analytical performance of his system.

1. Establish and confirm the details of the complaint with the customer, if possible with the relative print-outs.
   If possible follow the customer as he performs his daily routine sampling, checking on:
   - sample handling.
   - Materials used (IL Calibrants, etc.).
   - Use of calibrating controls.
   - Use of control sera.

   If this is not possible, or if there is uncertainty as to the details of the complaint, carry out the analysis of a sample tray (for instruments with autosampler), STAT or PREDILUTED analysis as used by the customer when the problem was seen.

| | CUP/SAMPLE | AUTOSAMPLE MODE | STAT MODE OR PREDILUTE |
|---|---|---|---|
| | CAL | 140/5 STD SOLUTION | 140/5 STD SOLUTION |
| | ZERO | | CS DILUENT |
| | 1 | CAL CONTROL 140/5 | CAL CONTROL 140/5 |
| * | 2 to 15 | KNOWN STD SERUM OR SOLUTION | |
| | 2 to 10 | | KNOWN STD SERUM OR SOLUTION |
| | 11 | | 140/5 STD SOLUTION |
| | 12 (AUTOCAL) | | CAL 140/5 |
| | 16 | 140/5 CAL SOLUTION | |
| | MID CAL | 140/5 CAL SOLUTION | |
| | 17 | CAL CONTROL | |
| | 13 | | CAL CONTROL |
| * | 18 to 31 | AS FOR 2 to 15 | |
| | 32 | 140/5 CAL SOLUTION | |

**N O T E** **These tests should be carried out using the actual laboratory methods.**

*: As a first step we recommend the use of calibration standard material 140/5 making sure that results obtained meet with instrument specs. See service manual sect. 1.3.6 and 1.3.7.

If the instrument meets the specification the following result should be obtained for the Na channel when using a tray full of calibration standard 140/5.

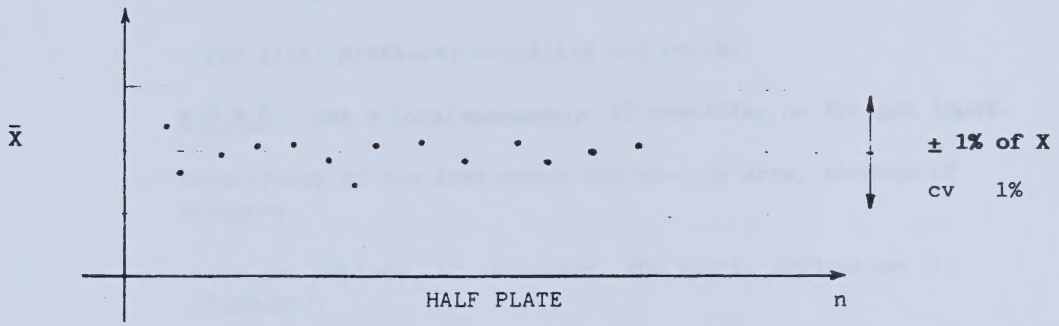


The following diagrams illustrate types of malfunction which might be present even when the CV% is within specifications.

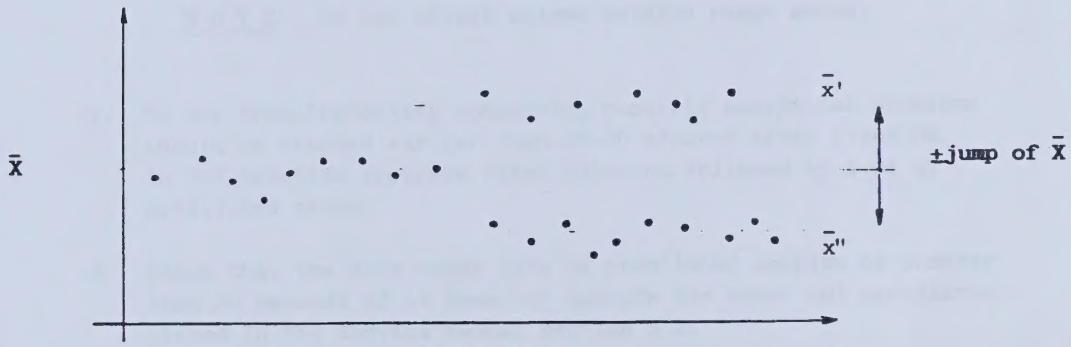


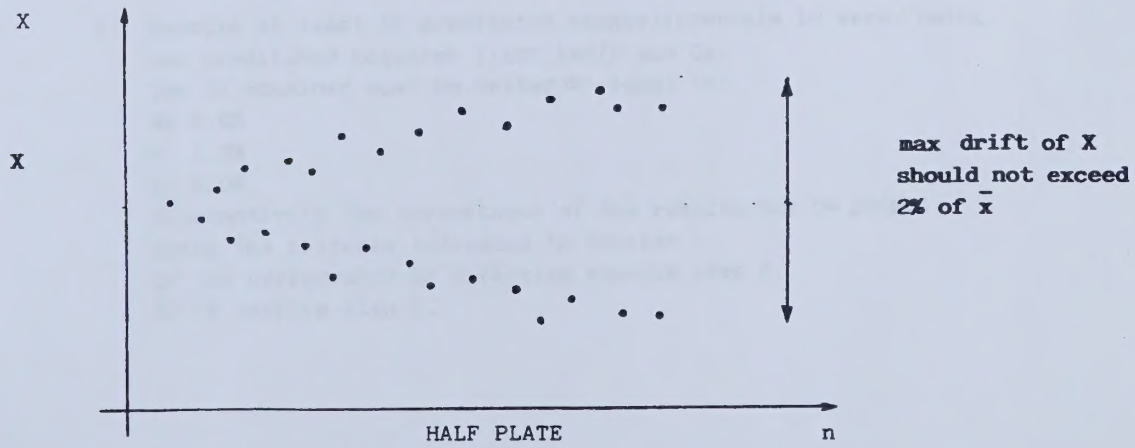

2. Preliminary checks (if possible in presence of the customer).

**N O T E** **These checks may be carried out before executing the tests described above if the instrument does not function at all in analysis.**

a) Presence of water in air filter bells (instrument and compressor) dry if necessary.

b) If centralised air or gas lines are used:
- air line: stability, pressure and cleanliness

**N O T E** **fit manometer to measure air pressure (970 gm/cm$^2$) prior to atomizer.**

- gas line: pressure, stability and purity.

**N O T E** **use a local manometer if possible, on the gas input.**

c) Cleanliness of the instrument and working area, absence of draughts.

d) Check and replace, if necessary, the sample aspiration tip (65183-00).

e) Check that the instrument aspirates and that the aspiration time is approximately correct (35÷45 secs.).

**N O T E** **Do not adjust unless outside range above;**

3. No any troubleshooting concerning possible analytical problems should be started earlier than 20-30 minutes after flame ON. In the meantime aspirate rinse solution followed by 1 ml of prediluted serum.

4. Check that the data ready time of prediluted samples be shorter than 20 seconds if it does not execute the check out procedures listed in the Service Manual section 5.2.

5. Execute at least 10 prediluted sample (intervals 10 secs.) using the prediluted solution 1:100 140/5 and Cs.
The CV obtained must be better or equal to:
Na 0,6%
K 1.0%
Li 2.0%
Alternatively the correctness of the results may be judged using the criteria indicated in section 1.
If the performance is defective execute step 6.
If OK perform step 7.

6. Check the following:
   - Air drainage (see daily maintenance in the Operator's Manual).
   - Burner assy.
   - Atomizer assy.
   - Gas tube assy.

   As described in the relevant section of this document, then perform the flame adjustment (Service Manual section 5.2.2).
   If you have any suspicion regarding the flame stability replace, if necessary, the gas shut off regulator and gas pressure switch with the new ones.
   **EXECUTE STEP 5 AGAIN.**

7. Visually inspect the system and check the following:
   a) check and if necessary perform the probe and tip adjustments (see service manual section 5.1.5).
   b) Sample needle brush should be replaced whenever it shows sign of excessive wear (holes affect a good cleaning action).
   c) Clean the spinning cup using a pad moistened in water and a mild detergent. Do not scratch the cup inner wall. (See service manual section 5.4.2).

8. Check the analytical performance as defined in section 1 taking care to observe the following points:
   - Use steril pvc or other similar gloves whenever handling biological specimen or touching parts of the instrument (sample tip, mixing cup, aspiration tip) which come into contact with samples.
     This will avoid the risk of having a poor precision results due to contamination introduced by the handling itself through perspiration of the fingers (Na results may be sometimes affected).
   - To ensure reproducibility use only pool standard solution for calibration. Avoid individual vials.
   - Use pool serum or solution for samples.
   - Both the vap-cap and evaporation ring must be used.

   The following results should be achieved.
   $\bar{x}$ obtained from the samples (sera or std) should be in the following range:
   Na ± 1% of the target nominal value
   K ± 1.5% of the target nominal value
   Li ± 2.5% of the target nominal value
   C.V. obtained from the sample (sera or std) should be better or equal to:
   Na 1% - K 1,5% - Li 2,5%

**N O T E**

**The service call procedures described above require the following materials:**
- **manometer 0÷1 Kg/cm$^2$ capable of reading ± 20 gm/cm$^2$ (p/n 24895-00)**
- **measuring gage 0.6 mm thick**
- **cuvette 2 ml for aspiration tests**
- **IL standard 140/5 (p/n 35140-00) 0.5 l.**

- IL standard vials 140/5/0 (p/n 97517-50)
  140/5/1 (p/n 33313-50)
- Control serum
  (This can be prepared on the customer premises using a serum available in the laboratory)
- Prediluted solution 140/5/0 and 140/5/1.
  (These can be prepared on the customer premises using above standards and Cs diluent)
- DVM 3½ digit for preamplifier setting:
- VAP caps.

N O T E

For instrument without autosampler the performances listed under 8 are still valid.
For details of tests in Stat see point 1.

## SECTION NINE - USER'S RECOMMENDED OPERATION (CHECK OUT)

### 9.1 START - UP

- Check for the absence of water in the rear panel and compressor filter bowl, bleed or empty as necessary.
- Check the Cs bottle level and that there is sufficient printer paper.
- Switch on the instrument, open the gas bottle regulator and in the serum stat mode, switch ON the flame.
- Check that air is coming from the bleed hole in the "body drain" on the rear of the instrument.
- It is advisable to leave the instrument in this condition for approx. 15 minutes, sampling is however possible during this time. To ensure the best analytical performance, when operating as above, we suggest a new calibration be performed every 4-5 samples.
- During a washing cycle check the correct positioning of the sample tip in the mixing cup between 0.5 - 1 mm below the surface of the sample after dispensing. If this requires adjustment enter "PREDILUTED-TEST-AUTOCAL".

### 9.2 REST PERIOD

If the instrument is in continuous or frequent use (one sample every ½ hour in STAT or one plate per hour in AUTOSAMPLE) then the flame should be left ON between sample sequences.

### 9.3 SHUT - DOWN PROCEDURES

When the instrument is to be shut down at the end of a day's work carry out the following steps:

- aspirate 5 ml of rinse solution (p/n 33110) diluted 1:50 with distilled water. (Aspiration tip in the prediluted position). The sample injector should be tefloned new one (see service note 943-18).
- Replace the aspiration tip in the STAT position and carry out 2 or 3 washing cycles (DILUTOR PRIME).
- Leave the instrument in the STAT position and switch OFF the flame.
- Close the gas regulator valve.
- Switch OFF the instrument if the shut down period is more than 24 hours.

### 9.4 SETTING OF ASPIRATION RATE

The aspiration rate is a critical item to the proper functioning of the instrument since it may influence the analytical quality of the results.
We strongly recommend the aspiration rate be periodically checked on a weekly basis.

The aspiration rate setting must be performed as follows:

a) lock the plastic tip needle assy in its clamp (see figure 1).

FIGURE 1

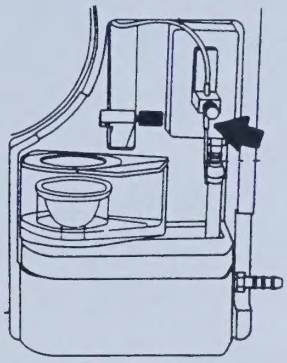

b) Select the prediluted mode and then press the test key; the Na display will function as a timer once the lamp test is over (4 seconds).

c) Turn the sample injector black wheel fully counterclockwise then back clockwise, making sure that the thread has engaged (see figure 2).

FIGURE 2

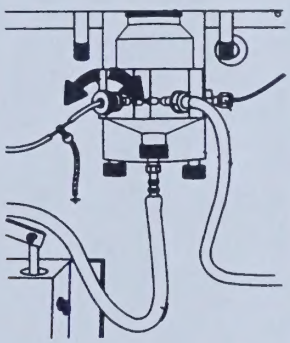

d) Present 1 ml of Cs diluent to the aspiration tip, making sure that the tip itself reaches the bottom of the vessel.

e) Turn the sample injector clockwise until the aspiration starts (Na display starts counting).

f) Record the aspiration time (Na display) which should be greater than 50 seconds.

- Turn the sample injector black wheel clockwise to increase the aspiration rate (decrease time) and repeat the measurement.
- Repeat the above operation till the aspiration time is 40 $\pm$ 2 seconds for 1 ml of Cs diluent.

**N O T E**

**Rotate the sample injector black wheel no more than 1/4 turn at a time.**

- Turn the black wheel 1/4 turn clockwise and repeat the measurment. The result should be a shorter time than that registered in the second step (i.e less than 40 seconds).

**N O T E**

**If the time increases then repeat the whole setting procedure since the sample tip is now on the wrong side of the air injector.**

- Turn the black wheel anticlockwise to reset the 40 seconds aspiration time as defined in second step.

80943/25

APRIL 1983

# IL943

## AutoCal Flame Photometer

# Service Manual

PRINTED IN ITALY, COPYRIGHT 1983, ALL RIGHTS RESERVED

Instrumentation Laboratory S.p.A. Viale dell'Industria 3 - 20037 Paderno Dugnano

Instrumentation Laboratory

## FOREWORD

The IL 943 Flame Photometer is an automatic instrument for the determination of the sodium, potassium and lithium concentration in sera plasma and aqueous solutions.
The internal reference for any of the above three elements is cesium.
In the 943 an internal microprocessor controls in real time the operation of the instrument in all functions and elaborates the data during measurement.
The instrument is available in several versions to take account of the diverse requirements of supply voltage and frequency encountered throughout the world.
The 943 has been constructed in accordance with the IEC (International Electrotechnical Committee) requirements for medical laboratory equipments and has been approved by the IMQ (Italian Safety Testing Agency) as being in accordance with the above requirements as defined by CEI 62/1-80 and IEC doc 62D (secretariat) 12.
In addition to the versions noted above, a special version has been defined which takes account of certain particular requirements of the USA domestic market and uses UL listed primary components where these are not covered by IEC approved components.
For all versions the mechanical components (screws, grub-screws, nuts, and bolts, etc.) are metric.
The scope of this manual is to give both technical and practical informations on the instrument and it is dedicated principally to service personnel.
The manual will be of use during necessary field repairs for trouble-shooting, dismantling of parts, instruments functional tests, etc.
The reproduction or copying of any part of this manual without the explicit written authority of Instrumentation Laboratory SpA, is prohibited.

TABLE OF CONTENTS


## SECTION ONE

**GENERAL INFORMATION**

| | | Page |
|---|---|---|
| 1.1.0 | Instrument description | 1/1 |
| 1.2.0 | Operating controls and displays | 4/1 |
| 1.3.0 | Instrument specifications | 6/1 |
| 1.4.0 | IL 943, 50 Hz, 60Hz, USA version differences | 7/1 |

## SECTION TWO

**FLUIDIC DESCRIPTION**

| | | |
|---|---|---|
| 2.1.0 | Introduction | 1/2 |
| 2.2.0 | Plumbing assembly | 1/2 |
| 2.3.0 | Dilutor assembly | 2/2 |
| 2.4.0 | Sample probe, mixing cup and aspiration tip | 3/2 |
| 2.5.0 | Atomizer and burner assembly | 3/2 |

## SECTION THREE

**OPERATING MODE**

| | | |
|---|---|---|
| 3.1.0 | Operating flow chart description | 1/3 |
| 3.2.0 | Operating cycle description | 1/3 |
| 3.2.1 | Switch on cycle | 1/3 |
| 3.2.2 | Standby flame-off cycle | 2/3 |
| 3.2.3 | Ignition and start-up cycle | 2/3 |
| 3.2.4 | Standby flame-on | 2/3 |
| 3.2.5 | Sample cycles<br>— Stat mode<br>— Autosample mode<br>— Predilute mode | 4/3 |
| 3.2.6 | Set cal cycles<br>— Stat mode<br>— Autosample mode<br>— Predilute mode | 4/3 |
| 3.2.7 | Autocal cycles | 5/3 |
| 3.2.8 | Sample measurement and data ready cycle | 6/3 |
| 3.2.9 | Stat cycle in autosample mode | 7/3 |
| 3.2.10 | Autosampler plate run cycle | 7/3 |
| 3.2.11 | Dilutor prime cycle | 7/3 |
| 3.2.12 | Flame-off cycle | 8/3 |
| 3.3.0 | Error codes | 8/3 |

## SECTION FOUR

**ELECTRONIC DESCRIPTION**

| | | Page |
|---|---|---|
| 4.1.0 | Signal Path and General Electric Block Diagram | 1/4 |
| 4.2.0 | Power Supply description | 1/4 |
| 4.3.0 | Preamplifier Sub-Unit description | 9/4 |
| 4.4.0 | Printer Sampler Board description | 11/4 |
| 4.5.0 | Display and Keyboard description | 14/4 |
| 4.6.0 | Single board Computer description | 18/4 |
| 4.7.0 | Thermal Line Printer description | 20/4 |
| 4.8.0 | Autosampler | 21/4 |

## SECTION FIVE

**INSTALLATION PERFORMANCE TESTS AND CHECK OUT**

| | | |
|---|---|---|
| 5.1.0 | Installation | 1/5 |
| 5.2.0 | Set-up Procedures | 3/5 |
| 5.3.0 | Performance Tests | 5/5 |
| 5.4.0 | Service Test Programs | 6/5 |
| 5.5.0 | Shut Down Procedures and Precautions for instrument Shipment | 10/5 |

## SECTION SIX

**TROUBLESHOOTING**

| | | |
|---|---|---|
| 6.1.0 | Routine Maintenance | 1/6 |
| 6.2.0 | Service Kits | 2/6 |
| 6.3.0 | Service Tools and Instrument Dismantling | 3/6 |

## SECTION SEVEN

**PARTS, DRAWINGS AND DIAGRAMS**

| | | |
|---|---|---|
| 7.1.0 | Parts list | 1/7 |
| 7.2.0 | Drawings and diagrams index | 2/7 |

## SECTION EIGHT

**IL 943 F.F. INTERFACE RS232C**

| | | |
|---|---|---|
| 8.1.0 | Introduction and characteristics | 1/8 |
| 8.2.0 | IL 943 transmission specifications | 2/8 |
| 8.3.0 | Kit interface list | 3/8 |
| 8.4.0 | Mounting kit description | 3/8 |
| 8.5.0 | Operating description | 4/8 |
| 8.6.0 | Drawings and diagrams index | 7/8 |

1.1.0
## INSTRUMENT DESCRIPTION

This section describes the various component systems of the IL 943 Flame Photometer.
A thorough knowledge of the instrument as described here will enable the user to master its operation easily and to solve any problem more rapidly.

1.1.1
### INSTRUMENT SYSTEMS

The IL 943 Flame Photometer can be considered as comprising three systems:
— Fluid Handling System
— Burner and Flame System
— Optics and Electronics System

1.1.2
### FLUID HANDLING SYSTEM

This is located on the lower part of the instrument front panel and is concealed behind a hinged door. From left to right the fluid handling system is formed by the following parts (see Fig. 1):

a)
**Cs diluent bottle:**
this plastic bottle contains 500 ml of cesium chloride diluent which is used to dilute the sample at a fixed nominal dilution ratio of 100 : 1.

b)
**Cs diluent aspirator:**
this stainless steel tube assembly is located inside the cesium diluent bottle to ensure regular aspiration of diluent.

c)
**Urethane tubing:**
a 1,0 mm internal diameter tubing for diluent transport.

d)
**Two way solenoid valve:**
this fluid valve is electronically operated and connects alternately the diluent chamber with the Cs diluent reservoir and sample chamber.

e)
**Piston dilutor:**
the dilutor is formed by an acrylic block within which two (diluent and sample) chambers are contained. Each chamber is fitted with a precision stainless steel fluid plunger.
The seal between chamber and plunger is provided by a stationary Teflon® ring backed by a rubber O-ring which is seated in the base of the chamber inner surface.
Beneath the acrylic block is the housing for the mechanical coupling between the motor, which operates the dilutor, and the plungers.

f)
**Sample probe:**
the sample probe is a precision stainless steel assembly which accepts 20 µl of sample, either from a cup on the autosampler or from any vessel manually presented to it.

g)
**Sample probe Wheel:**
a motor driven wheel assembly onto which the sample probe is clamped. The wheel rotates over a 205° arc from the autosampler cup, sampling position, to the spinning cup, delivering position, (in Autosampler mode) or over 100° from its resting position to the spinning cup, delivering position, (in Stat mode).

h)
**Spinning Cup Assembly:**
the spinning cup assembly includes a motor drive, a non wettable plastic spinning cup, an outer waste cup, and a drain collector receptacle, where excess diluted sample from the spinning cup and analyzed sample waste from the nebulizer collect prior to draining via the vaste tube.
The spinning cup receives diluted sample from the sample probe, mixes the sample, allows aspiration via the sample aspiration tip and, after analysis is completed, evacuates itself by high speed rotation.

i)
**Sample Aspiration tip:**
this is made up by a stainless steel holder onto which a Teflon® tip is push fitted.
This assembly is clamped on the sample aspiration arm which is linked with a solenoid which lowers the sample aspiration tip into the spinning cup during sample analysis.

j)
**Prediluted Clamp:**
this fixed position arm is to be used to clamp the sample aspiration tip when analysing prediluted samples.

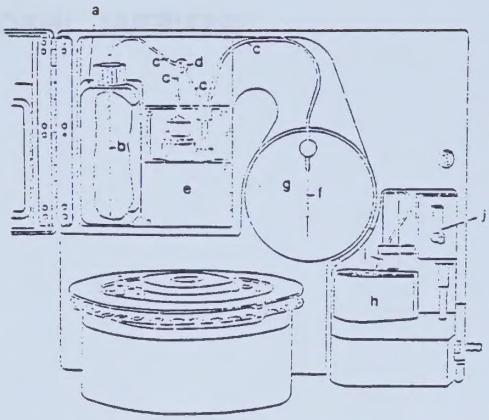


Fig. 1 - Fluid Handling system

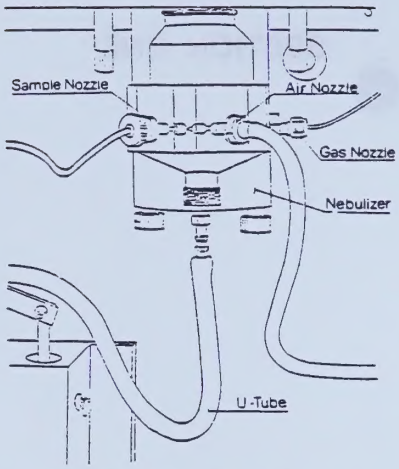


Fig. 1 a - Nebulizer

1.1.3
**PLUMBING ASSEMBLY**

The plumbing assembly regulates the fuel and oxidant flow to the burner. It is housed in the right hand section of the instrument and is concealed behind a screw-on panel.
The plumbing is formed by two physically separated assemblies:
a propane gas line
a compressed air line.

**Gas line**

a)
*Micron Filter Assembly:*
the propane gas enters the plumbing through a five micron filter which removes particulate matter from the gas.

b)
*Gas Pressure Switch:*
a safety switch which is activated when the gas pressure is equal to or greater than 1,4 atm (20 psi) thus enabling the ignition cycle.

c)
*Gas Solenoid Valve:*
an electrically operated fuel shut off valve regulated by the ignition and safety control circuit.

d)
*Gas Pressure Regulator:*
factory set to produce a constant output of 0,25 atm (3,6 psi) and will accept gas pressure in the range 1,4 - 14 atm (20-200 psi).

e)
*Gas Filter Assembly:*
this second on-line filter also produces, through a jewelled orifice, a constant gas flow to the nebulizer.

**Air line**

a)
*Air Bowl Type Filter (external):*
a 5 micron filter is housed within a see-through bowl assembly on the rear panel of the instrument.
Besides preventing particulate matter from entering the plumbing the bowl collects moisture present in the compressed air and consequently has to be periodically emptied of its water contents through the drain plug which is located on the bottom of the bowl itself.

b)
*Moisture Bleed Fitting:*
as a further precaution to remove air moisture a bleed plug is provided at the lowest point in the air line after entering into the system.

c)
*Air Solenoid Valve:*
an electrically operated air shut off valve regulated by the ignition circuit.
The heat generated by the solenoid is used to further decrease the air moisture.

d)
*Air Pressure Switch:*
activated by a pressure equal to or greater than 1,4 atm (20 psi) it activates the gas valve and turns off the « No Air » indicator.

e)
*Air Pressure Regulator:*
factory set to produce a constant output of 0,97 atm (13.8 psi) and will accept air pressure in the range 1,4 - 4,0 atm (20-58 psi).

**Nebulizer**

The nebulizer, located in the plumbing and chimney compartment on the right hand side of the instrument beneath the burner, (see Fig. 1a) is fed with controlled air and propane supplies through jewelled orifices.
The fuel and oxidant mix, and pass up through the burner tube to the flame.
The air jet also serves to aspirate diluted sample into the atomizer.
Air is directed across the sample capillary, which produces a reduced pressure in the capillary.
Sample is aspirated and atomized by the air jet.
As the aspirated sample impinges on the wall of the nebulizer chamber, a large proportion collects and is removed by the U-tube drain.
Only the smallest droplets, about 10% of the solution aspirated, go into the flame.

1.1.4
**BURNER AND FLAME**

A mixture of air, propane fuel and small sample droplets pass up the burner tube to the flame.
The combustion of propane provides sufficient energy to break apart molecules and complex ions into neutral atoms and to excite the alkali atoms.
A curtain of clean, filtered air surrounds the flame, preventing spurious contamination by atmospheric dust or smoke.
A number of separate events occur sequentially in the flame to convert the sample solution to excited atoms.
The most important of these is the dehydration of the sample droplets and the atomization of the resulting solute particles.
The optimum operation of the atomizer chamber is thus essential for optimal atomization.

1.1.5
OPTICS

Light emitted from excited atoms in the flame passes through the long horizontal window of the chimney and through four separated interference filters.

Each filter has a bandpass near the characteristic emission wavelength of sodium (589 nm), lithium (670 nm), potassium (776 nm) or cesium (852 nm). The light passing through each filter strikes the photo detection system producing a current output proportional to the light intensity.

The presence of the flame is also monitored by a photocell through the smaller window in the chimney to activitate the « Flame » indicator.

The instrument should not be operated with the flame housing cover removed, since light incident on this photocell may give a false « Flame » condition.

1.1.6
ELECTRONICS

Except for some of the safety controls, the total behaviour of the 943 Flame Photometer is governed by the microcomputer.

The many inputs to the system, such as photodiode data, push button and other switch operation, are conditioned by the microcomputer in accordance with programs and subroutines permanently stored in a computer-type memory.

Additionally, the microcomputer provides temporary data storage.

For any chemical sample, either two or three of the four channels send data through the analog-to-digital converter.

Each must be stored while the data which follows is converted.

Furthermore, for noise analysis, several readings are taken for each parameter; these must be stored prior to analysis in the digital section.

All computations are performed at the digital level. Comparisons and decisions regarding data validity are also made, with the computer sending fault signals when required.

Light from the flame reaches four optical filters. Narrow-band optical filters pass light characteristic of only one element of the three which can be analysed or of cesium, the reference element.

This light reaches the photo detector associated with that channel.

After one stage of linear amplification, the signals are coupled to low-pass filters.

A four channel multiplexer allows the micro computer to select each signal in turn for further amplification and conversion to a 12-bit binary expression.

The micro computer then processes the raw data. Readings are analysed statistically to ascertain first that they are within the linear range of the instrument.

Readings are then analysed statistically to verify that the noise level is adequately low; that is, a group of readings must fall within predetermined limits.
If so, a ratio of reference reading to sample reading is performed.

This operation results in data in units of millimols per litre (mmol/l).

At appropriate times, the processed data which is stored in the random access memory of the micro computer, is delivered through output ports and seven-segment decoders to the digital displays.

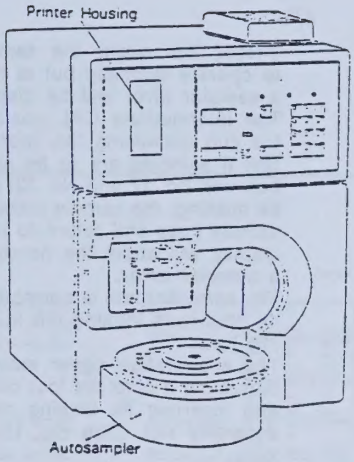


Fig. 1 b - Printer and Autosampler Location

1.1.7
PRINTER (OPTIONAL)

This is a thermal strip printer and is located on the left hand side of the front panel.
The paper roll is situated within a purpose-made recess behind the metal flap and a see-through window, hinged on the instrument plastic moulded facia (see Fig. 1b).

1.1.8
SAMPLER (OPTIONAL)

The IL 943 automatic sampler is attached via 3 fixing nuts and bolts to the lower left part of the instrument front panel.
The sampler consists of a removable 35 position sample tray which can rotate to present samples sequentially to the sample probe.
An optical switch located on the sampler top detects the presence or absence of a cup.
The sampler has no means of recognising a random sample position but, through a sequential step wise counting system and an end of plate control sequence it does provide correct sample numbering providing that the plate is always initiated from its clearly labelled Start position and is never manually moved during autosampler operation.

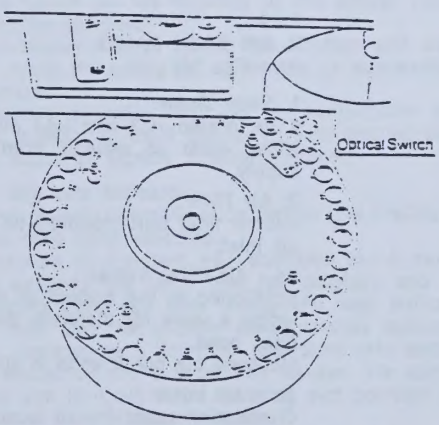


Fig. 1 c - Autosampler top wiew

Should this occur the sample plate will continue to operate normally but at the end of the plate run a sampler error will be displayed (Err PL1).
The intermediate CAL position must be filled with the cup containing the appropriate calibrating solution if samples are to be analysed on any position between No. 17 and No. 32; should the calibrant cup be missing, the sample plate will skip all subsequent sample cups and return to the Sart position and the display will show the notation « Err PL 0 » to flag a sampler error.
The sampler plate is correctly positioned by inserting its underside locking pin in the drive plate positioning hole.
The evaporation cover **must be placed** in position by resting it onto the four pillars on the sample plate and inserting its locking pin in the optical switch assembly slot. (See Fig. 1c).

**Note:**
at « power on » the sampler plate advances one position to reset the electronic counting device.
Also once every three hours in Standby Flame off.

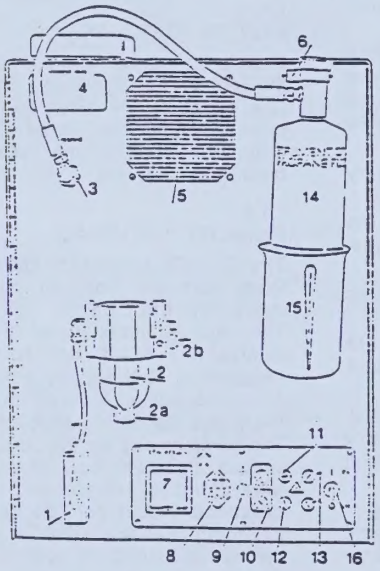


Fig. 1 d - Back panel

1.1.9
**IL 943 BACK PANEL**
(see Fig. 1d)

**1. Body Drain:**
a perforated (0,3 mm i.d.) plug on the air line to allow water to escape from the compressed air supply.

**2. Air Filter:**
micron filter unit mounted on the instrument at the air inlet.

**2a - Air Filter Valve:**
positioned at the bottom of the air filter bowl providing a valve for manually bleeding water from the filter bowl.
Unscrew the black knob to allow water to escape.

**2b - Air Inlet:**
Connection point for air hose leading from the air filter of the manifold or compressor supply.

**3. Gas Inlet:**
connection point for gas hose and gas pressure switch.

**4. Instrument Rating Label:**
specifies voltage, frequency, model and serial number of the instrument.

**5. Cooling Fan:**
draws air through the electronic component section of the instrument.
The fan operates continuously when A.C. power is applied to the instrument.

**6. RS 232 Output Socket Housing:**
accepts pin female/male socket for the **(optional)** RS 232 serial computer output.

**7. Compressor Receptacle:**
a three terminal socket controlled by the « Flame » key providing a power supply to an external air compressor.

**8. Power Cord Connection:**
A.C. power inlet cord.

**9. Ground Plug:**
a grounding port which is connected to the chassis and the power supply earth.

**10. Mains Fuses:**
protect the instrument against electrical overload.

**11. 800 mAmp. Fuse:**
protects the fan motors from electrical overload.

**12. 4,0 Amp. Fuse** (for 220 V.):
protects the air compressor from electrical overload.

**13. Instrument Power Supply Fuses** (for 220 V.):
two 1,25 Amp. fuses to protect the power supply transformer from electrical overload.

**14. Propane Fuel Cylinder:**
a 0,45 Kg. liquid propane cylinder.

**15. Cylinder Holder:**
conveniently holds the propane bottle.
May be removed by sliding up and away from retaining screws.

**16. ON/OFF Switch:**
controls the mains power supply to the instrument.

1.2.0
## OPERATING CONTROLS AND DISPLAYS
(See Fig. 2)

**Sodium Digital Display:**
a four digit LED display which displays sodium concentration results directly in mmol/l of the original sample.
The total digit display capability is from —99,9 to 999,9.
The display flashes when:
a)
the instrument working range (—1,0 to 200,0) is exceeded;
b)
the instrument fails to calibrate;
c)
in the presence of a noise condition during a sample cycle.

**Potassium/Lithium Digital Display:**
a four digit LED which displays potassium or lithium concentration directly in mmol/l.
Total digit display capability is —9,99 to 99,99.
The display flashes when:

a)
the instrument working range (—1,00 to 200,0) is exceeded;
b)
the instrument fails to calibrate;
c)
in the presence of a noise condition during a sample cycle.

**Internal Standard (Cs) Indicators (Hi, Lo):**
off during regular functioning of the instrument are lit to indicate that the internal standard reading is outside optimal working range.

**K/Li Indicator:**
each indicator is lit according to which mode of operation has been selected (sodium-potassium or lithium).

**Noise Indicator:**
lights to indicate that the electronic signal received from one or more of the measured parameters is less stable than the predetermined electronic range for that parameter.

**No Air Indicator:**
controlled by the air pressure switch, the indicator lights when the air supply pressure is less than 1,4 atm (20 psi).

**No Gas Indicator:**
controlled by the gas pressure switch, the indicator lights when the gas pressure is less than 1,4 atm (20 psi).

**Flame Key and Indicator:**
depression of this key (with instrument powered on and flame off) initiates an automatic flame ignition cycle.
Conversely with flame on it initiates a flame off cycle.
The indicator flashes during the flame ignition and flame off sequence and is permanently lit when the flame is on.

**Sample Key and Indicator:**
depression of this button will initiate a dilution cycle (except in the prediluted mode) followed by a sample analysis cycle.
The indicator flashes during the dilution and signal averaging cycle and is permanently lit when the data is ready and when the instrument has successfully carried out autocal or autozero cycles.

**Serum Key and Indicator:**
depression of this key selects the serum digital range of operation and calibration.
Activation of the serum mode automatically locks-in an autocalibration value of 140 mmol/l for sodium and 5,0 mmol/l for potassium.

**Urine Key and Indicator:**
depression of this key selects the urine digital range of operation and calibration.
Activation of the urine mode automatically locks-in autocal value of 100 mmol/l for sodium and potassium.

**Lithium Key:**
depression of this key selects the lithium digital range of operation and calibration.
Activation of this mode automatically locks-in an autocal value of 1,00 mmol/l for lithium.

**Stat Key and Indicator:**
when this key is depressed the instrument is set for Stat operation (i.e. manual sample presentation) and the indicator lights up.
If Stat mode is selected with the instrument in autosample mode, the Stat key indicator will flash during the analysis cycle and light up permanently once this has been completed.
The Stat key indicator also flashes to signal, in conjunction with the acustic warning, the end of an autosample run.

**Autosample Key and Indicator:**
when this key is depressed the instrument is set for operation with the autosampler and the indicator lights up.

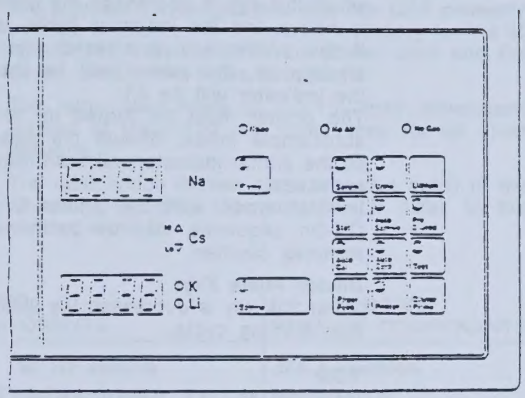


Fig. 2 - Operating controls and displays

**Prediluted Key and Indicator:**
depression of this key disables all automatic dilution and sample transport functions thus allowing the analysis of prediluted samples and standards.

**Autocal Key and Indicator:**
depression of this key initiates an automatic dilution cycle (except in the prediluted mode) followed by an autocal cycle which results in the adjustment of the values on the displays to the preset values of the calibration standards.
The indicator flashes during the dilution and autocal cycle and remains lit when this is successfully terminated.
A flashing autocal indicator in conjunction with either a flashing result display or a lit internal standard indicator, signals a calibration failure.

**Autozero Key and Indicator:**
depression of this key initiates an automatic dilution cycle (except in the prediluted mode) followed by an autozero cycle which results in the adjustment of the values on the displays to the preset values of zeroing solution.
The indicator flashes during the dilution and autozero cycle remaining lit when this is successfully terminated.
A flashing autozero indicator in conjunction with either a flashing result display or a lit internal standard indicator signals autozero failure.

**Test Key and Indicator:**
this key is only operative once Serum and PreDiluted mode have been selected.
Depression of the test key activates for a period of 4 seconds the lamp test (all displays and led indicators light up) after which the test indicator will flash and the sodium result display automatically operates as a timer for aspiration rate setting.
Depression of the autocal key causes the sample probe arm to move to its spinning cup position and to deliver 2 ml of cesium diluent.
To return the sample probe to its rest position and to evacuate the spinning cup press autocal again.
Depression of the autozero key activates the printer test.
To exit from the test program press the Test Key.

**Paper Feed Key:**
when depressed this key will energize the printer motor for as long as the key is kept pressed.

**Printer Key and Indicator:**
when this key is depressed the thermal strip printer is active and the indicator lights up.
If the printer key is pressed when the printer is already on, the printer will be then disabled and the indicator will go off.
The printer must be turned on to operate in the autosample mode. Should the operator fail to do so the printer indicator will flash requesting a printer activation.
In Stat mode with the printer On, a printer key Off-On sequence may be performed to reset the samples counter.

**Dilutor Prime Key:**
when this key is depressed the dilutor will carry out one priming cycle.

1.3.0
## INSTRUMENT SPECIFICATIONS

1.3.1
### MEASURED PARAMETERS/READOUT RANGE

| | | | |
|---|---|---|---|
| Na | — 1,0 | to | 200,0 |
| K | — 1,00 | to | 20,00 |
| K-Urine | — 1,0 | to | 200,0 |
| Li | — 1,0 | to | 10,0 |

1.3.2
### OPERATING CHARACTERISTICS

Sample Size
20 µl ± 2

Dilution Ratio
100 : 1

Diluent Volume
2000 µl ± 20

Ambient Temperature Range
15° - 35°C

Ambient Operating Humidity (maximum)
85%

Fuel
Propane or Butane, instrument grade

Air Requirements
Filtered, oil and water free, from manifold or portable compressor at 40 psig and 0,5 scfm.

Internal Standard
1,5 mmol/l Cs.

1.3.3
### ELECTRICAL REQUIREMENTS

Line Voltage
100, 110, 115, 125, 220, 230, 240, 250 VAC ± 15%

Frequency
50 or 60 Hz

1.3.4
### INSTRUMENT DIMENSIONS

Weight (shipping)
65 Kg

Weight (net)
45 Kg

Width
39,0 cm

Height
56,0 cm

Depth
66,0 cm (with autosampler and propane bottle)

1.3.5
### SHIPPING CARTON DIMENSIONS

| | |
|---|---|
| Width | 82,2 cm |
| Depth | 62,2 cm |
| Height | 113,0 cm |

1.3.6
### PRECISION
**(expressed as CV% at 90% confidence limits)**

| | With Dilutor | Without Dilutor |
|---|---|---|
| Na | 1,0 | 0,6 |
| K | 1,5 | 1,0 |
| Li | 2,5 | 2,0 |

1.3.7
### LINEARITY

Na ± 1,5 mmol/l
(in the 120 to 160 mmol/l range)

K ± 0,15 mmol/l
(in the 2 to 8 mmol/l range)

Li ± 0,15 mmol/l
(in the 1,0 to 3,0 mmol/l range)

**Note:**
both precision and linearity are referred to Primary Acqueous Standards.
The IL 943 Flame Photometer has been manufactured according to I.E.C. (International Electrotechnical Commitee) Regulations and Documents relating to the Safety of Medical Laboratory Equipment, and has IMQ (Italian Safety Testing Agency) approval.

1.4.0

## IL 943, 50 HZ, 60 HZ, USA VERSION, DIFFERENCES

The IL 943 is available in various configurations in order to cover a wide range of supply voltages, frequencies and to take account of certain local regulations (e.g. USA domestic version).
With regard to supply voltage, all principal values encountered in the world may be set by adjusting the position of the primary lead connections to the transformer terminal strip (see section 5.1.2).
In certain cases it will be necessary to change the fuses on the back panel.

Two supply frequencies are envisaged, 50 and 60 Hz, and the two instrument configurations differ with respect to the three synchronous motors and the two solenoid valves (gas and air). The USA domestic version, in addition to the parts necessary for the 60 Hz version, differs also in the power cord and the power switch and fuses assembly.

The latter uses fuses of $^1/_4 \times 1^1/_4$ inch dimensions instead of the 5 x 20 mm fuses used for all other versions.

The table which follows gives an exact detail of the situation regarding the parts which differ in the various versions.

| | I.E.C. APPROVED PRIMARY COMPONENTS | | U.L. APPROVED PRIMARY COMPONENTS |
|---|---|---|---|
| **Part description** | **50 Hz version** | **60 Hz version** | **U.S.A. version** |
| | 220 V/110 V | 220 V/110 V | 110 V 60 Hz |
| **Dilutor motor assy** | **95040-01** | **95043-01** | **95043-01** |
| **Sample probe assy** | **95041-01** | **95044-01** | **95044-01** |
| **Autosampler motor assy** | **95045-01** | **95046-01** | **95046-01** |
| **Air plumbing assy** | **65717-00** * | **65721-00** * | **65721-00** * |
| **Gas plumbing assy** | **65718-00** * | **65722-00** * | **65722-00** * |
| **Power cord assy** | **71992-00** | **71992-00** | **71996-00** |
| **Power switch and fuses assy** | **71045-00** | **71045-00** | **71055-00** |
| **Main fuses** | **68914-00** (5 AT - 250 V)<br>**68918-00** (10 AT - 125 V) | **68914-00** (5 AT - 250 V)<br>**68918-00** (10 AT - 125 V) | **68922-00** (10 ASB - 110 V) |
| Dimension | 5 x 20 mm | 5 x 20 mm | $^1/_4 \times 1^1/_4$ inch |
| **Fan fuse** | **68916-00** (0,8 AT - 250 V) | **68916-00** (0,8 AT - 250 V) | **68925-00** (0,8 ASB - 110 V) |
| Dimension | 5 x 20 mm | 5 x 20 mm | $^1/_4 \times 1^1/_4$ inch |
| **Compressor fuse** | **68915-00** (4 AT - 250 V)<br>**68919-00** (8 AT - 125 V) | **68915-00** (4 AT - 250 V)<br>**68919-00** (8 AT - 125 V) | **68906-000** (8 ASB - 110 V) |
| Dimension | 5 x 20 mm | 5 x 20 mm | $^1/_4 \times 1^1/_4$ inch |
| **Instrument fuses** | **68917-00** (1,25 AT - 250 V)<br>**68920-00** (2,5 AT - 125 V) | **68917-00** (1,25 AT - 250 V)<br>**68920-00** (2,5 AT - 125 V) | **68924-00** (2,5 ASB - 110 V) |
| Dimension | 5 x 20 mm | 5 x 20 mm | $^1/_4 \times 1^1/_4$ inch |

*** The only difference between the 50 Hz and 60 Hz versions of the Air and Gas plumbing assemblies is the solenoid valve itself.**

**The 50 Hz version solenoid valve has the part number 82775-01 while the 60 Hz version has the part number 82775-02. The solenoid valves are identical for both the Air and Gas plumbing assemblies.**

**Exchange of the solenoid valve alone, therefore allows a service engineer to convert any plumbing assembly rapidly.**

**In case of emergency it is only necessary to interchange solenoid valve bobbins. Individual bobbins are, however, not available.**

# SECTION TWO FLUIDIC DESCRIPTION

2.1.0

## INTRODUCTION

(Figure 1 - Fluidic block diagram)
This section will describe all elements of the fluidic system.

2.2.0

## PLUMBING ASSEMBLY

(Drawing 1, 34 and 12, 35)

The 943 Plumbing has been changed in many of its details with respect to the previous traditional IL Flame Plumbing.
It consists principally of two mechanically separated lines, a gas line and an air line.

The separation of gas and air permits easier maintenance and/or service.

2.2.1

### AIR LINE (Drawing 1)

The air line path consists of an external air filter cup, body drain, a solenoid valve, an air pressure switch, a pressure regulator and a PVC tube connecting the air plumbing assy to the atomizer chamber.

Referring to Figure 1 the filter cup holds a 5 μ filter element that has the purpose of preventing the entrance of dirt into the air line.

A second purpose is to condense moisture from the compressor.

(This filter is mounted on the rear of the instrument prior to the male connector elbow (8) shown in Drawing 1).

The condensed water falls in the cup and has to be drained periodically using the discharging screw located in the lower part of the filter cup.

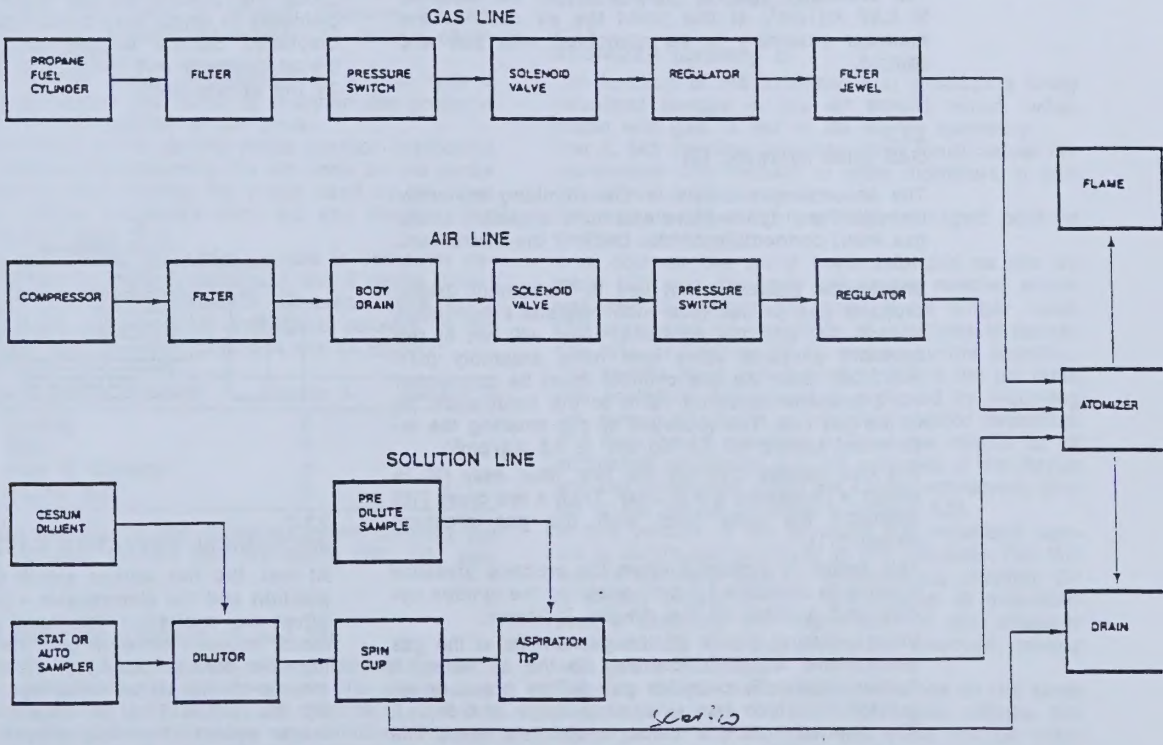


Fig. 1 FLUIDIC BLOCK DIAGRAM

The air passes through the filter cup and arrives at the body drain (6) fitting by means of an external nylon tube.
The body drain has two main functions:
firstly it has an high condensating capability, due to its large metallic mass, so it condenses the moisture and discharges it through a hole in the drain plug located in the lowest position.
Secondly the body drain has its air input lower than the output, which is the main axis of the air line assy.
This is done since, because the moisture in the air rises with difficulty, it has less chance reaching the body drain output.
Next, the air passes via a 1/4" nipple to the air solenoid.
The position of the electrovalve with respect to the air pressure switch (4) has been chosen for safety reasons; in fact in the case that the electrovalve remains permanently open for any reason, the air pressure switch immediately informs the electronic section to inhibit the gas electrovalve.
The air electrovalve also provides the air heating by using the energy coming from its solenoid.
The average working temperature of the electrovalve is about 40°C, in this way the relative moisture saturation content in the air is decreased to ensure a virtually moisture free oxidant.
After the electrovalve the air passes the pressure switch (5) which is activated when the air pressure is equal to or above 1,4 atm, enabling the opening of the gas valve and turning off the no-air indicator.
Following the pressure switch is the air pressure regulator (2) which has a working range of 0-25 p.s.i.
A particular characteristic of this pressure regulator is that the internal nozzle is entirely in stainless steel. There is no longer a buna o-ring, which could create potential blockage in the following air path.
The pressure regulator output has to be adjusted tc 0,97 Kg/cm²; at this point the air reacnes the atomizer assembly to be combined with gas and sample.

2.2.2
**GAS LINE** (Drawing 12)

The propane gas enters in the plumbing assembly through the propane valve and nose assembly at the gas input connection on the back of the instrument.
**Note:**
Should the Customer not use IL instrument grade, propane gas bottles (see also operator's handbook section 1.5) and the container used will not fit the standard propane valve and hose assembly (p/n 24573-00), then the gas cylinder must be connected via a propane reducing valve to the input point (8) of the gas line. The pressure of gas entering the instrument should be 2,8 Kg/cm² ± 0.5 Kg/cm².

The gas passes through the first filter assy (9) in which is contained a 5 µ filter. Then a tee cross (10) connects the assy filter with the gas pressure switch (11).

This switch is activated when the propane pressure is equal to or above 1,5 atm, enabling the ignition cycles and turning off the no-gas indicator.

Via a reducing nipple (7) the gas arrives at the gas electrovalve which is identical to the air valve. A further nipple (5) provides gas to the pressure regulator (4) which has a working range of 0-5 p.s.i. The internal nozzle is made in stainless steel. The pressure regulator output has to be adjusted in accordance with the set up procedure (see section 5.2.0).

Next the gas reaches a tee (2) connection that has two outputs. The first is a plug which can be removed for factory testing of the pressure at the output of the gas regulator. The second is the gas outlet to a second filter assy (12) that holds the same 5 µ filter as in position 9 followed by a jewel orifice, dia. 0,25 mm., prior to injecting gas into the atomizer chamber.
Referring to drawing 35 the filter (16) is held in place by a spring that guarantees the filter/jewel seal.
The jewel diameter is chosen to provide the correct pneumatic load when the regulator is in its optimum linear range setting, i.e. around 0,25 Kg/cm².

2.3.0
## DILUTOR ASSEMBLY

2.3.1
**GENERAL** (Drawing 5, 10 and 36)

The IL 943 dilutor has been specifically designed to produce a precisely diluted mixture when using small samples (20 µ litres).
The dilution ratio is 1 : 100 so that the diluent volume used is 2000 µ litres.
The absolute dilution ratio for each individual dilutor may vary by ± 5%, differences being compensated for by the computer, but the precision of each dilutor is such as to produce repeatable dilutions with an accuracy of 0,5% (r.s.d.).
The following figure shows the dilutor fluidic paths when aspirating (A) or dispensing (D):
The internal volume of the sample probe is 35 µl sc that during sample aspiration the sample volume is contained within the probe itself.
The only liquid, therefore, present in the dilutor is the Cesium diluent so that there is minimum risk of contamination.
Since the pistons do not touch the walls of the cylinders in which they move, the volumes of liquid displaced depend entirely upon the accuracy of piston diameter and travel. The travel is determined by the driving cam.

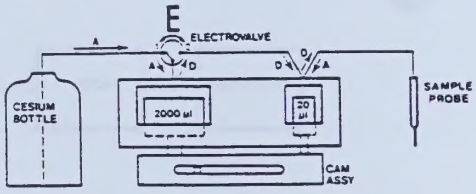


2.3.2
**MECHANICAL OPERATING CYCLE**

At rest, the two pistons are in the top dead centre position and the electrovalve « E » in position 1.
When the aspiration command is given the dilutor motor mover clockwise and the cam rotates drawing the pistons down to bottom dead centre by means of the piston coupling.
By this action 2 ml of diluent are drawn into the larger cylinder from the diluent reservoir and 20 µl are drawn from the sample probe into the smaller cylinder. This latter action draws 20 µl of sample into the probe itself.

The instrument now commands the dispensing when the sample probe is positioned in the mixing cup. At this stage the electrovalve « E » is in position 2 and, while the contents (20 µl) of the small cylinder are being dispensed into the mixing cup, the contents (2 ml) of the larger cylinder are being pumped through the small cylinder into the same mixing cup.

2.3.3
**ELECTRICAL SENSORS**

In order to detect the top or bottom dead centre positions an optical sensor consisting of a light emitting diode and photo transistor is mounted adjacent to the cam drive shaft. A disc cam mounted on to the cam drive shaft opens and closes the light path between the diode and transistor.
When the dilutor pistons are rising the path is closed (i.e. logic « 0 »), the disc cam is adjusted such that when top dead centre is reached the path is just open (logic « 1 ») and the piston drive cam is not touching either surface of the piston coupling.
In the bottom dead centre position (i.e. moving from logic « 1 » to logic « 0 ») the drive cam should also be spaced from either surfaces of the piston coupling.

2.4.0
## SAMPLE PROBE, MIXING CUP AND ASPIRATION TIP

2.4.1
**SAMPLE PROBE** (Drawing 10, 27 and 29)

The purpose of the sample probe is to transport the sampled liquid into the mixing cup. This is true both in Stat and Autosample modes. In the autosample mode the sample probe additionally, moves into the sample cuvette prior to aspiration.
The sample needle consists essentially of a precise stainless steel tube of internal diameter 0,4 mm treated with a polishing process to reduce carry-over problems.
The sample probe is mounted on a disc with a cogged rubber belt drive to maintain the probe in the vertical position at all times.
Adjustment of the sample probe position (vertically) is achieved by loosening the red knob on the probe assembly and moving the probe itself up or down (see Set-up procedure sect. 5.2 and Service Test Programs sect. 5.4).
The position of the sample probe is computer detected by two optical sensors A and B which detect holes in a disc mounted to the probe drive shaft. The logic conditions of these two sensors in the various sample probe positions are as follows:

| Sample probe position | Sensor A | Sensor B |
|---|---|---|
| Moving | 0 | 0 |
| Stat | 1 | 0 |
| Auto S. Cuvette | 0 | 1 |
| Mixing cup | 1 | 1 |

These conditions are displayed when carrying out the relevant service test procedure (t20, t21, section 5.4).

2.4.2
**MIXING CUP** (Drawing 10 and 26)

Both in the Stat and Autosample modes the sample and diluent are dispensed into the mixing cup. After the first 1,5 seconds of dispensing the cup starts to agitate clockwise and anticlockwise for about 200 msec in each direction. When dispensing is completed the sample probe is removed and the cup continues agitation for a total period of 8,4 seconds. In this way a completely homogeneous solution of sample and diluent is achieved.
After completion of the reading cycle the remaining solution is evacuated by the mixing cup rotating anticlockwise at high speed for 4 seconds followed by a slowing down, or braking, period of 300 milliseconds.
In this way carry over is reduced to an absolute minimum.
The evacuated solution flows to the waste drain together with the atomizer waste.

2.4.3
**ASPIRATION TIP** (Drawing 10 and 28)

The aspiration tip consists of a stainless steel tube to which an interchangeable tygon tip is fitted.
The tip may be mounted in a special holder for prediluted solution or on to the arm of an electromagnet for Stat or Autosample modes, where the mixing cup is used.
The remote end of the tip is connected via a tygon tube to a « T » junction for grounding purposes and then to the atomizer sample injector assembly.
When aspiration from the mixing cup takes place the electromagnet is activated causing the tip to be inserted into the solution for a period of 15 to 37 seconds (data ready).
The position of the tip should be adjusted so that its tip is about 1 mm above the bottom of the mixing cup and not touching the « domed humps » which assist in creating good mixing.
The metal and tygon tubes of the aspiration tip should be regularly checked for obstruction by performing the aspiration test described in section 5.2.

2.5.0
## ATOMIZER AND BURNER ASSEMBLY

In the following sections the atomizer and burner assembly will be described.

2.5.1
**ATOMIZER** (Drawing 3)

The function of the atomizer is to produce a finely nebulized sample in the air stream which, when mixed with gas, is fed to the burner assembly.
The IL 943 atomizer includes some fundamental improvements with respect to older atomizers in particular in the lower section.
The sample input (6) has been changed both in position and design.
It is now on the same horizontal axis as the air input (11) and the long adjustable needle, which was also the aspiration probe is no longer used. This eliminates the possibility of variations of aspiration rate, or bending of the needle by the operator.
The sample input is mounted at 90° to the air input and positional adjustment is achieved by mounting the sample needle in a threaded injector assembly. The fine thread provided enables the needle to be accurately positioned and the tightness of the thread and the o-ring seal eliminate casual movement. (Refer to the set up procedure section 5.2).
In this version of the atomizer the nebulized sample is distributed vertically in the atomizer. For this reason the lower part of the atomizing chamber (1) is slightly longer so that the chance of nebulized sample reaching the upper part of the chamber and entering the burner before thorough mixing with gas is minimized.
Because the gas orifice (13) is mounted on the same horizontal axis as the air and sample orifices, the lower part of the atomizer has three vertical drain channels. In this way the remaining liquid sample which flows around the atomizer wall is successfully

prohibited from reaching the gas or air orifices causing pollution.
The sample liquids drain into the waste or drain tube which is at the bottom of the atomizer, passing through a tygon tube to arrive at the « U » tube (p/n 95677-00) whose input is at the same level as the centre of the atomizer drain.
The position of the « U » tube should be regulated so that the waste liquid level is about half way up the vertical position of the atomizer drain.
The purpose of the « U » tube and tygon tube, which are primed with distilled water at installation, is to minimize the effects of the drain variations on the internal atomizer conditions.
In the IL 943, the atomizer assembly is mounted behind a door on the right hand side of the instrument.
In this way the assembly is both protected and kept clean whilst still allowing for easy access.

**Note**
Should the lower part of the atomizer have to be removed for cleaning or the air input orifice replaced, check the positioning of the air orifice with respect to the sample injection nozzle (0,6 ± 0,1 mm) as shown in drawing 3.

2.5.2
**BURNER** (Drawing 4)

The mixture of gas, air and sample reaches the burner via the upper part of the atomizer assembly. The burner and flame are protected by a glass chimney with windows for the preamplifier photosensors and the flame sensor.

The flame is further protected from external variations and instability by a stream of air which passes from the air orifice through a small tube to the base of the flame.

The top of the glass chimney is covered with a coarse wire mesh (p/n 20168) and the cover chimney (p/n 67844-00).

In this way exhaust gases can escape but light cannot enter.

**Note:**
The flame cannot be lit when the cover chimney is removed because light impinges on the flame sensor.
Mounted on the burner itself is the spark plug (p/n 70951-00) used for lighting the flame.
The whole burner assembly is mounted behind a hinged door for easy access. The door is held shut by the cover chimney.

# SECTION THREE OPERATING MODE

## 3.1.0 OPERATING FLOW CHART DESCRIPTION

Figure 1 shows the various operating modes of the instrument in block diagram form.
**All the operating modes described in this section or in others are referred to the IL 943 Software Rev. 3.**

All operating modes start with the switch on of the instrument at which time the probes are reset and internal controls check the status of the various sub-assemblies.

This reset action is followed by a dilutor prime cycle without aspiration.

The instrument is now in its normal standby or rest condition and is the condition recommended when the instrument is not being used for a significant period of time, i.e. 2 or more hours.
The flame may now be lit, this is normally done with the instrument in the STAT mode (See Section 3.2.3. for flame ignition in Predilute mode).

After « flame on » the instrument commences a cycle of dilutor prime with aspiration during which the signal « BUSY » appears on the Na display.
The busy cycle lasts between 3 and 4 minutes and during this period the keyboard is inoperative.
At the end of « flame on » cycle, i.e. when the BUSY signal disappears, the instrument remains in Stby Flame ON condition, or the operator may select:

— measurement mode (SERUM, URINE, LITHIUM)

— operating mode (STAT, AUTOSAMPLE, PREDILUTED)

— FLAME OFF. The instrument will return to the standby mode with flame OFF.

**Note:**

1) If no samples are made for a period of about 3÷4 minutes in STAT or AUTOSAMPLE the instrument will perform a BUSY cycle with dilutor prime and aspiration.

2) 15 minutes after the last calibration in STAT or PREDILUTED modes the instrument will request a new calibration (1 point).

3) If the operator changes from the PREDILUTED to STAT or AUTOSAMPLE modes or vice versa, a SET CAL (2 point calibration) will be requested. (See section 3.2.6).

4) If the measurement mode (SERUM, URINE, LITHIUM) is changed, a SET CAL will be requested.

5) If the operator requests an urgent STAT during Autosampler sampling and does not request measurement mode change, no calibration request is made.

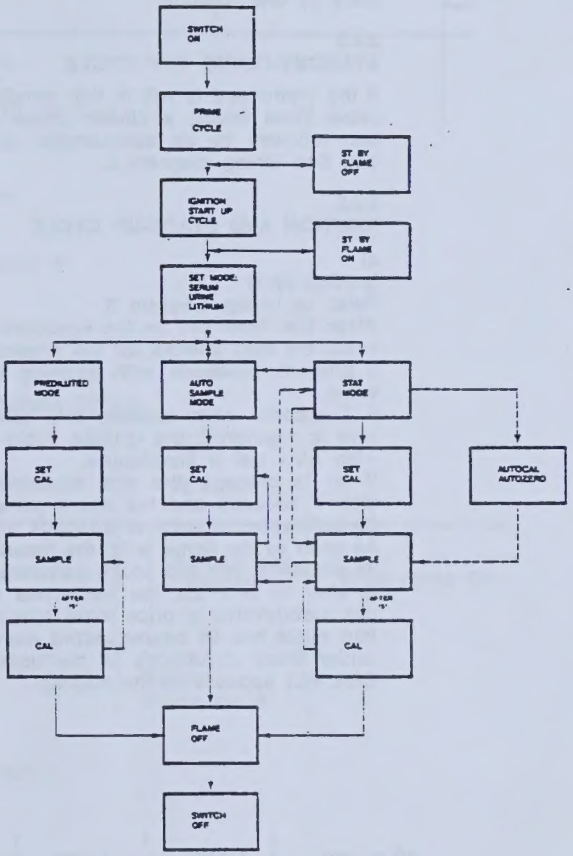


Fig. 1 - Operating flow chart

## 3.2.0 OPERATING CYCLE DESCRIPTION

In the following description, details and timing diagrams of each of the main blocks in Figure 1 are described.

### 3.2.1 SWITCH-ON CYCLE

Refer to timing diagram 1.
At switch-on the BUSY signal appears on the Na display and the SERUM and the STAT leds are illuminated.

After 10 milliseconds the displays are all switched off, while the SBC checks for the presence of the RS 232 C interface and the printer, together with a « dot » test.
The display and leds are then illuminated again. During the following 15-25 seconds the position of the sample probe (STAT position) and dilutor (piston up) are checked after which a prime cycle takes place.
At the end of priming an evacuation of the mixing cup is carried out without aspiration.
When the sample probe has returned to the STAT position, the SBC checks for the presence of the autosampler and, if present, resets the cuvette position for correct alignment advancing the cuvette plate by one position.

3.2.2
**STANDBY-FLAME OFF CYCLE**

If the instrument is left in this condition then, once every three hours, a dilutor prime without aspiration followed by an autosampler check is carried out. See timing diagram 2.

3.2.3
**IGNITION AND START-UP CYCLE**

a)
**Ignition cycle**
Refer to timing diagram 3
When the flame key on the keyboard has been activated the SBC checks for the presence of gas and, if present, proceeds with opening the air electrovalve.
If 7 seconds after opening this valve no air pressure is registered, the ignition cycle aborts and the « No Air » led is illuminated.
If air is present, the gas electrovalve is opened after 7 seconds and the spark generator produces 20 millisecond sparks at intervals of 1 second.
As soon as the flame is lit, the flame sensor detects its presence and the spark generator is inhibited.
If, after 10 seconds, the flame has not ignited, the gas electrovalve is once more closed and the ignition cycle has to be requested manually again.
Under these conditions of malfunction, the signal ERR. FL1 appears on the display.

b)
**Start up (priming) cycle**
Refer to Timing diagram 4
Assuming the flame to have been switched on in the STAT or AUTOSAMPLE mode a series of three prime cycles (See section 3.2.11.) takes place.
This cycle is intended to prime the dilutor and precondition, the aspiration path and atomizer prior to calibration and sampling.
The total sequence during which the signal BUSY is shown on the display, takes 228 seconds.
During this period the keyboard is inhibited and no other operator intervention can take place.
At the end of the start-up cycle the signal BUSY is extinguished and the AUTOCAL led flashes.
If the PREDILUTED mode has been selected this start -up cycle does not take place.
The signal BUSY appears for about 1 second after flame ON and is then extinguished and the led AUTOCAL flashes.

**Note:**
if the PREDILUTED mode has been selected prior to flame on, then pre-conditioning of the aspiration path and atomizer should be ensured by aspirating a suitable prediluted solution for about 2-3 minutes prior to calibrating or sampling.

3.2.4
**STANDBY-FLAME ON**

Refer to Timing diagram 5
If the instrument is not used after flame ON or 4 minutes after the last sample, the dilutor aspirates and then the sample probe transters the diluent to the mixing cup and returns to the STAT position.
The aspiration tip is then lowered and aspiration takes place for 35 seconds.
The tip is then raised and after another 4 minutes of delay a further 35 seconds of aspiration takes place.
At the end of this second aspiration the mixing cup evacuates for 5 seconds and the complete cycle restarts.
If no calibration has taken place, or about 15 minutes have elapsed since the last calibration, the AUTOCAL led will be flashing at the end of the aspiration periods.

**SWITCH ON CYCLE**

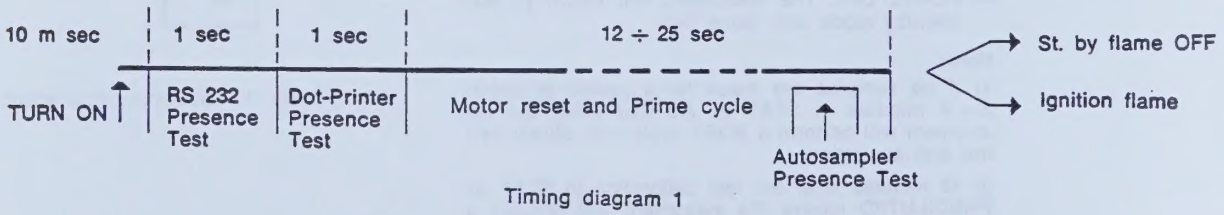


Timing diagram 1

**ST BY FLAME OFF**

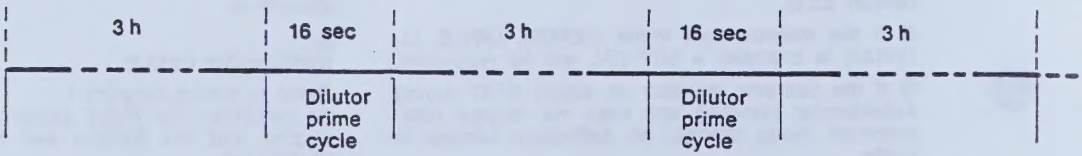


Timing diagram 2

## IGNITION CYCLE

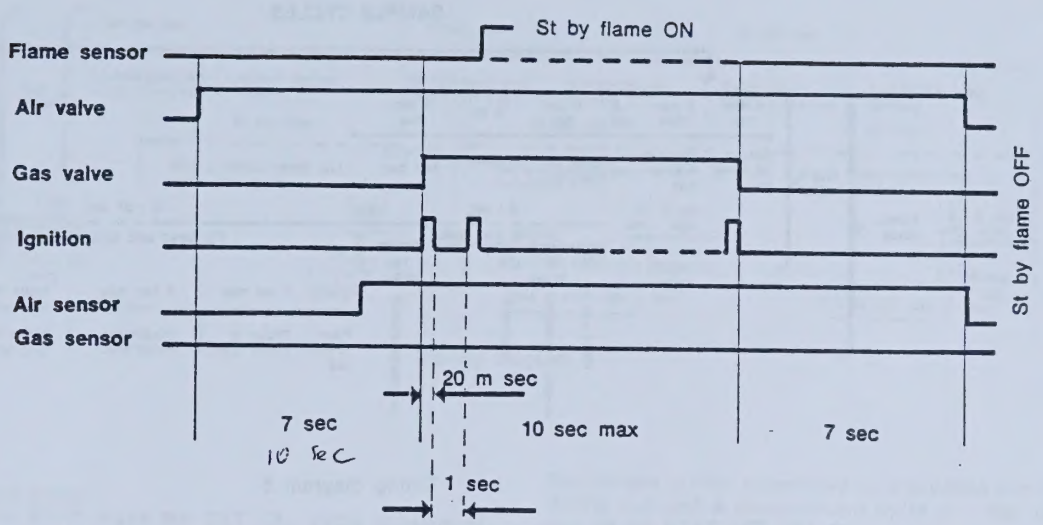


Timing diagram 3

## START UP (PRIMING) CYCLE

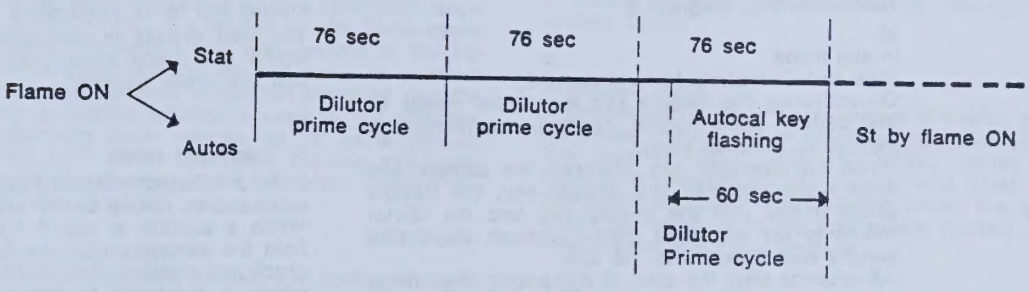


Timing diagram 4

## ST BY FLAME ON

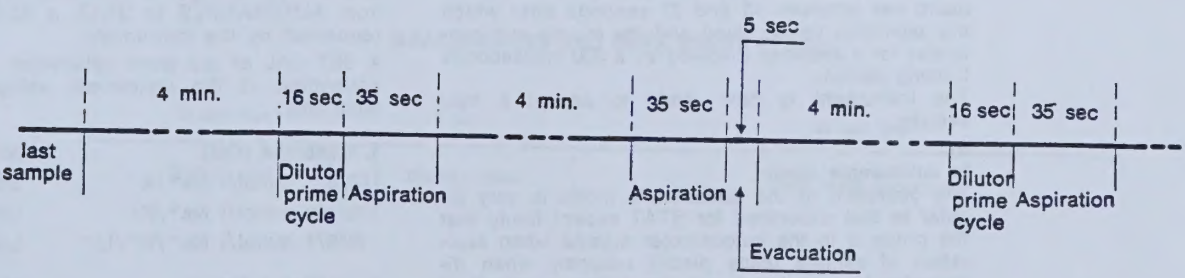


Timing diagram 5

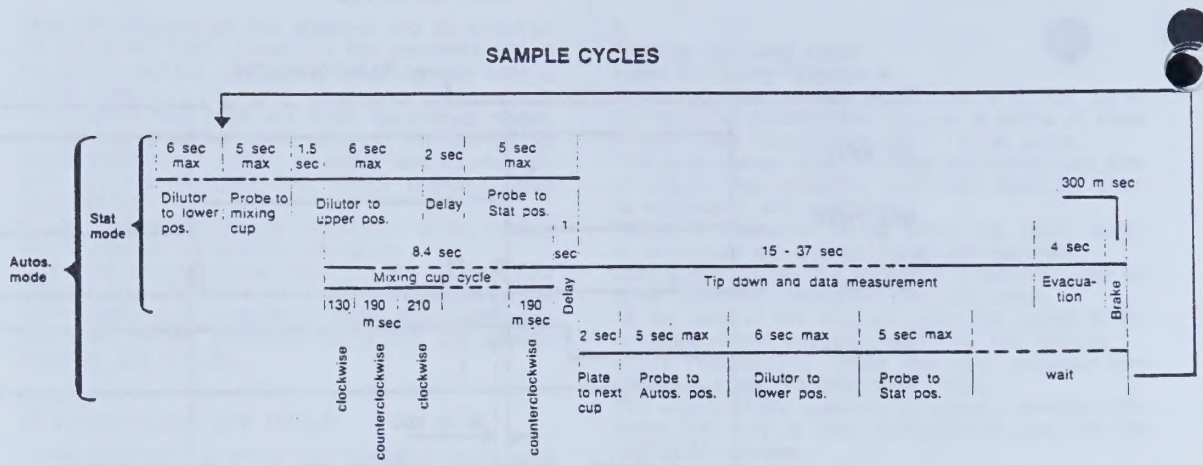


Timing diagram 6

3.2.5
**SAMPLE CYCLES**
Refer to timing diagram 6

a)
**In stat mode**
(See also Operator's Manual sec. 4.2)
On activating the sample key the dilutor moves to the bottom dead centre position, aspirating the sample (6 seconds max).
When the operator has removed the sample and once more activated the sample key, the sample probe moves into the mixing cup and the dilutor moves to the top dead centre position dispensing sample and diluent into the cup.
1,5 seconds after the start of dispensing, the mixing cup starts to agitate clockwise and anticlockwise as showing in the timing diagram 6.
After a total period of 8 seconds following the start of dispensing, the sample proble returns to the STAT position.
Following a total of 8,4 seconds agitation the mixing cup stops and 1 second later the aspiration tip is immersed into the cup to start aspiration and measurement.
The time to data ready (completion of measurement) lies between 15 and 37 seconds after which the aspiration tip is raised and the mixing cup evacuates for 4 seconds followed by a 300 milliseconds braking period.
The instrument is now ready to accept a new sample.

b)
**In autosample mode**
The operation in the autosample mode is very similar to that described for STAT except firstly that the probe is in the autosampler cuvette when aspiration of sample takes place; secondly when dispensing is completed and the probe is raised, it moves to the STAT position and waits while the autosampler moves to the next cuvette.
The probe then moves to this cuvette where a new aspiration takes place.
The probe then returns to the STAT position where it waits for measurement and evacuation of the mixing cup to be completed.
The new sample is then dispensed at the end of which the probe returns to the autosampler tray and the cycle repeats.

c)
**In prediluted mode**
In the prediluted mode no movement of sample probe, autosampler, mixing cup or aspiration tip takes place. When a sample is called for, the operator has to hold the sample under the tip, which is now in the prediluted position holder and wait for data ready, which is indicated by the SAMPLE led remaining illuminated permanently.

3.2.6
**SET CAL CYCLES**

Refer to timing diagram 7.
At switch on of the instrument, after any change in measurement modes (SERUM, URINE, LITHIUM); and at any change in operating mode other than from AUTOSAMPLE to STAT, a SET CAL cycle is requested by the instrument.
A SET CAL of two point calibration cycle demands calibration of the instrument using the following calibrants:

| **1. Calibrant (Cal)** | **Mode** |
|---|---|
| 140/5 mmol/l $Na^+/K^+$ | Serum Na, K |
| 100/100 mmol/l $Na^+/K^+$ | Urine Na, K |
| 140/5/1 mmol/l $Na^+/K^+/Li^+$ | Lithium |

| **2. Calibrant (Zero)** | **Mode** |
|---|---|
| 0 | Serum Na, K |
| 0 | Urine Na, K |
| 140/5/0 mmol/l | Lithium |

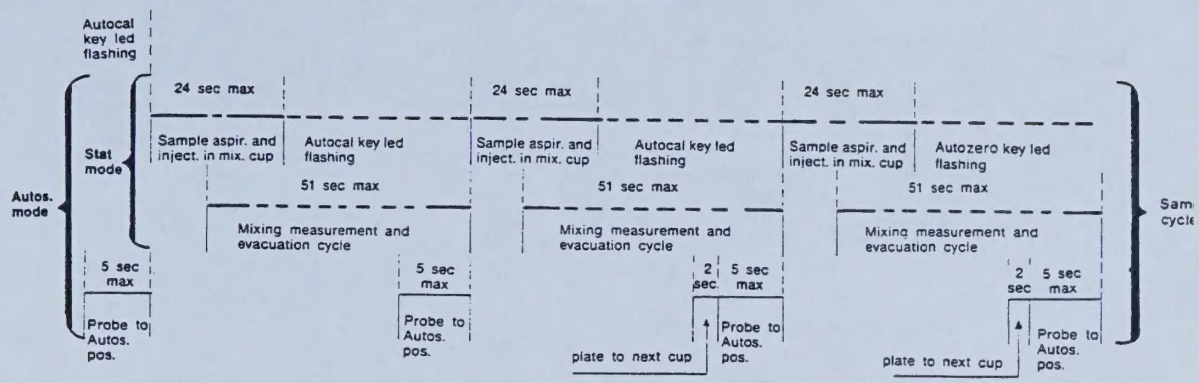


Timing diagram 7

a)
**In stat mode**
In the STAT mode the SET CAL cycle consists of two independent Autocal cycles followed by an Autozero cycle.
Mechanically each of these internal cycles (Autocal or Autozero) is like a sample cycle as previously described in sec. 3.2.5.a.
From the electronic or calculation point of view, the first Autocal cycle is « free range », that is to say the computer defines the voltages from the preamplifier board as representative of the first calibrant (see table before)).
During the second Autocal cycle a restricted range of ± 5 mmol/l $Na^+$, 0,4 mmol/l $K^+$ (for Urine mode 5 mmol/l), 0,4 mmol/l $Li^+$, with respect to the initial values established in the first cycle, is imposed. This ensures accurate calibration provided that the correct calibrating solution is used by the operator. The Autozero cycle defines, as its name implies, the zero point of the calibrating solution and therefore sets the slope of the appropriate channel response (Na, K or Li).

b)
**In autosample mode**
When the autosampler is used, the computer requires a SET CAL cycle at the beginning of each plate. In this case the operation is as follows:
when the operator activates Autocal the sample probe moves into the relevant cuvette and the dilutor aspirates.
The sample is then transferred by the probe into the mixing cup and a measurement cycle in « free range » as for STAT SET CAL takes place.
At the end of this measurement the probe moves once more from the STAT position into the same cuvette and a second sample, for the second Autocal Cycle, is taken. If calibration is achieved correctly the autosampler moves to the Zero cuvette position, the probe aspirates and the instrument measures the « zero » sample.
Assuming correct SET CAL the autosampler plate then moves to the cup 1 position and the first sample is measured using the sequence as described in section 3.2.5.b.

c)
**Prediluted mode**
In the prediluted mode no movement of dilutor, sample probe, mixing cup or aspiration tip takes place. The leds AUTOCAL and AUTOZERO define the operations required of the operator who must hold the prediluted calibrating solution under the aspiration tip (which is in the appropriate holder) until data measurement is complete.

3.2.7
## AUTOCAL CYCLES

Fifteen minutes after the last calibration, or half way round the autosampler plate, the instrument requests an Autocal.

## MEASUREMENT AND DATA READY CYCLE

Timing diagram 8

This calibration is equivalent to the second AUTO-CAL of a SET CAL sequence as described above. The electronic limits imposed are also the same.
Failure to calibrate correctly will result in the request for a SET CAL cycle.
During Autosampler run, in the case of failure of the intermediate calibration, the instrument will try a second time, after which, if the error still remains, the plate will skip on to the start position, the display will flash and the printer will present the message:

ERROR!! REPEAT RUN

3.2.8
**SAMPLE MEASUREMENT AND DATA READY CYCLE**

Refer to timing diagram 8, Program block schematic Fig. 2 and acquisition timing diagram 9.
During the first 10 seconds, the program circulates at point A (fig. 2) returning to the start.
If at the end of the period the Cesium signal is within range (± 60% of nominal) the programme proceeds, otherwise Cs, HI or LO is indicated.
During the following 7 seconds the program circulates at point B (fig. 2) prior to asking the question « Is the value in range? ».
During this period the values in mmol/l are displayed.
The Data ready range values are as follows:

| | |
|---|---|
| Cs | ± 30 points during set range (calibration) |
| | ± 15 points for all other measurements |
| NA | ± 0.3 mmol/l |
| K serum | ± 0.3 mmol/l |
| K urine | ± 0.2 mmol/l |
| Li | ± 0.2 mmol/l |

The acquisition timing diagram (9) shows how the data is acquired.
During the first 896 milliseconds of acquisition 4 mean values of 8 data acquisitions for each channel are calculated and stored.
During the following seconds this cycle is repeated thus building up groups of 4 means for each channel.

In the next period these groups of 4 means are taken 4 at a time (i.e. 16 mean values of 8 data acquisitions) and the mean of the means is calculated.

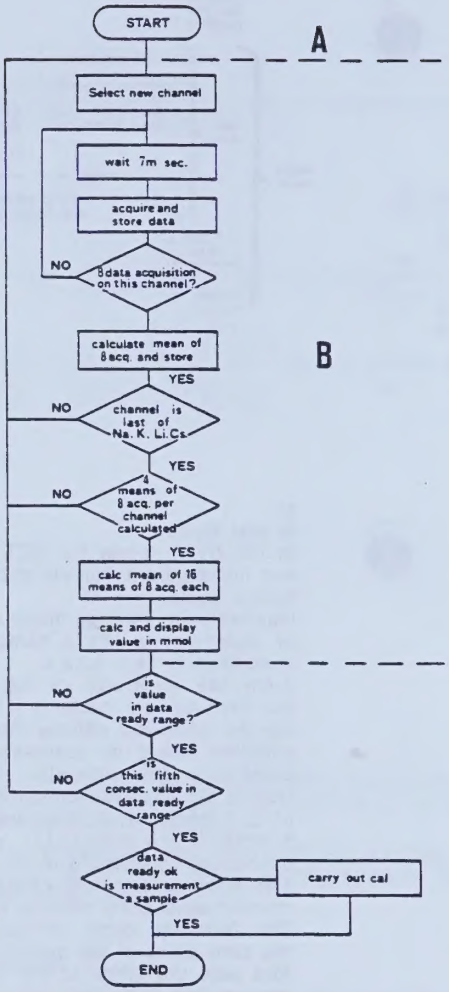


Fig. 2 Measurement and data ready program block.

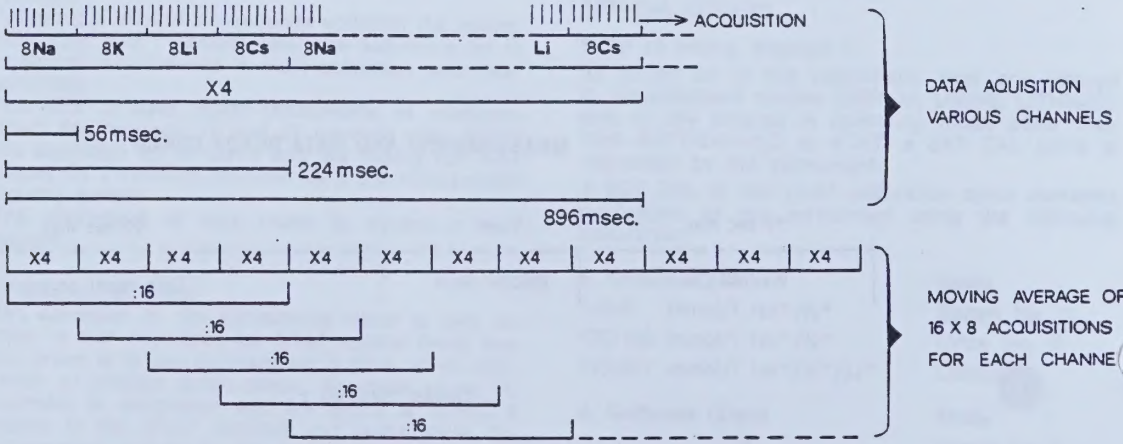


Timing diagram 9

## AUTOSAMPLER PLATE RUN CYCLE

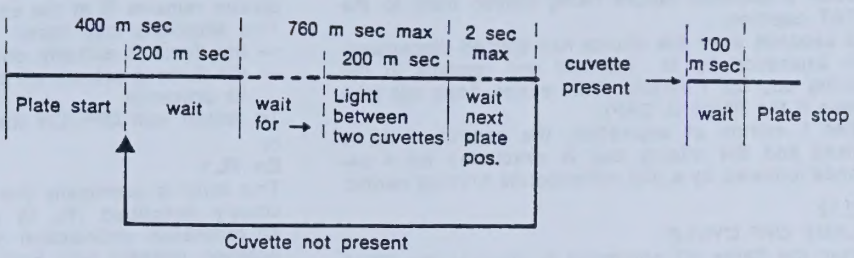


Timing diagram 10

This process is continued being updated every 896 milliseconds with a new group of means until the data ready conditions are met and the displayed values are frozen.
The maximum time for measurement is 37 seconds as shown in timing diagram 8, if data ready is not achieved, then the channel showing noise is indicated by causing the display to flash and printing question marks instead of a value.

3.2.9
**STAT CYCLE IN AUTOSAMPLE MODE**
If the operator wishes to carry out an urgent sample while the instrument is running in the Autosampler mode he merely has to activate the STAT key and the following sequence of event takes place:

1)
The STAT led flashes while the instrument completes the sample being measured and the sample which may be in the sample probe ready for measurement.

2)
When sampling is completed the STAT led remains on permanently and the Autosample led is off.

3)
Samples may now be presented in the same measurement mode (Serum, Urine, Lithium) as was being used for the Autosampler without the need to recalibrate. If however the measurement mode is changed a new calibration will be requested.

4)
At the end of STAT samples it is only necessary to reactivate the Autosample key and the instrument will resume sampling from the sampler plate, memorizing the calibration from earlier.
The timing of this cycle is essentially a combination of timing cycles already described in previous sections.

3.2.10
**AUTOSAMPLER PLATE RUN CYCLE**
Timing diagram 10 shows the instrument cycle involved in advancing the autosampler plate from one cup to the next, even if cups are not in adjacent positions. After giving the command to start the plate moving, the software, waits for 400 milliseconds and then, for a further 760 milliseconds during which the 200 milliseconds light signal between two cuvettes is awaited.
If this signal is detected the software waits for a period of up to 2 seconds for the plate position sensor to operate.
If a cuvette is not present, then the programme recycles, as shown, until cuvette presence is detected after which there is a wait of 100 milliseconds after which the plate is stopped.

**Note:**
if the plate has only been partially filled and no centre calibration cuvette (between cups 16 and 17) has been inserted, then the plate will move to the end position and plate error will be indicated.

3.2.11
**DILUTOR PRIME CYCLE**
Timing diagram 11 shows the cycle of dilutor prime in both flame ON and flame OFF conditions.
After the command has been received the computer causes the dilutor to aspirate for six seconds max during which time the pistons are moved to bottom dead centre, aspiration is stopped when the dilutor sensor recognizes a « 0 ».
The sample probe then moves to the mixing cup and, within a period of 5 seconds the probe sensors must have detected the correct positioning (« 1 », « 1 ») or error will be indicated.
The dilutor then moves towards the top dead centre position dispensing diluent into the mixing cup. The probe then remains in the mixing cup for a

## DILUTOR PRIME CYCLE

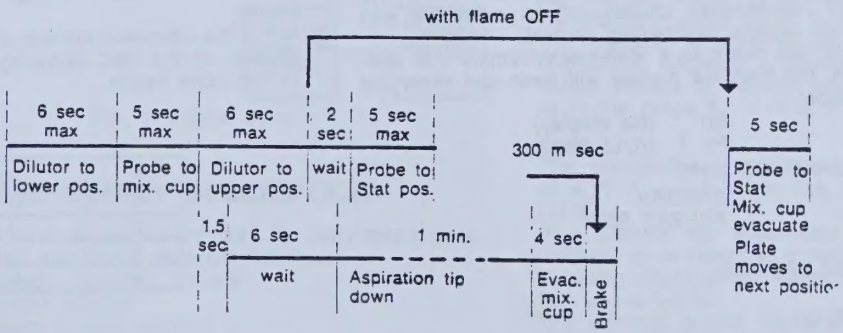


Timing diagram 11

further 2 seconds before being moved back to the STAT position.
7,5 seconds after the dilutor has started dispensing, the aspiration tip is lowered and remains in the mixing cup for 1 minute (This action does not take place if the flame is OFF).
After 1 minute of aspiration, the aspiration tip is raised and the mixing cup is evacuated for 4 seconds followed by a 300 milliseconds braking period.

3.2.12
**FLAME OFF CYCLE**
When the flame off command is given in the STAT mode, the instrument carries out a priming cycle to clean the sample probe, aspiration tip, atomizer etc. prior to shutting off the flame.
This cycle is as described in 3.2.11 and at the end the gas valve is closed.
Air is still passed for a further 7 seconds prior to switching off the air valve.
This clears any residues of gas from the plumbing system downstream of the gas valve.
During the whole of the flame OFF cycle, the flame led is flashing until the flame actually goes out, at which point in time the led goes off.

3.3.0
## ERROR CODES

3.3.1
**GENERAL DESCRIPTION**
During the various operating cycles described in the previous sections, if some errors occur, an error code will appear on the displays.

3.3.2
**AUTOSAMPLER PLATE ERRORS**

a)
**Err PL 0**
Should the Autozero and/or the intermediate Calibration (*) cup be missing, the sampler will skip all subsequent positions, the sample tray returns to the Start position.
The Readout display shows the message:

Err (Na display)
PL 0 (K/Li display)

and the printer will print:

ERROR!!
REPEAT RUN

**Make sure that Autocal cups are in their correct position and start run again.**

(*)**NOTE:** Only applies if sample cups in any position between No. 17 and No. 32 are present.

b)
**Err PL 1**
As described in this manual (section 4.8.2), the IL 943 Autosampler carries out an automatic end of plate sample numbering control.
Should this result in a step-count/sample cup mismatch, the Readout display will flash and show the message:

Err (Na display)
PL 1 (K/Li display)

the printer will print:

ERROR!!
REPEAT RUN

3.3.3
**FLAME ERRORS**

a)
**Err FL 0**
This error notation refers to an erroneous flame detection by the flame detectors, i.e. the Flame indicator remains lit at the end of a Flame OFF cycle.
Two situations may occur:
— the flame is actually on;
— the flame is actually off but the instrument signals its presence.
To restart turn OFF/ON the instrument.

b)
**Err FL 1**
This error is practically the reverse of the one previously described (FL 0) and indicates therefore an erroneous undetection of flame. The FL 1 error notation appears with both « NO GAS » and « NO AIR » indicators off, and the Flame indicator off.
To restart turn OFF/ON the instrument.

3.3.4
**MOTORS POSITIONING ERRORS**
The electric motors driving the sample probe, the dilutor pistons and the sampler plate are enabled and disabled at precise time intervals during the instrument operation (i.e. the sample tip at the end of a sample analysis in the Stat mode must be in its rest position). Should anything interfere to modify this timing, error signals are displayed by the led result display.

a)
**Err 1**
Sample probe motor positioning error flagged by the Err 1 notation.
Restart turning power instrument OFF and ON.

b)
**Err 2**
Dilutor motor positioning error flagged by the Err 2 notation.
Restart turning power instrument OFF and ON.

c)
**Err 3**
Autosampler plate motor positioning error flagged by the Err 3 notation.
Restart turning power instrument OFF and ON.

3.3.5
**PRINTER ERROR**
**Err 0**
Should the printer drive circuit produce a failure, the Err 0 notation will be flagged and the printer will turn itself off automatically. Turn the instrument power OFF/ON to restart.

3.3.6
**CHECKSUM ERROR**
During the IL 943 operation, continuous self checks are carried out by the instrument microprocessor. Should at any time memory errors be established, the instrument will stop and the display will show the following error message:

EP n (Na display)
Err (K/Li display)

where:
«n» is the reference number of the defective memory section, of the SBC (drawing number 25) as shown in the table below.

| n | I.C. (SBC) |
|---|---|
| 1 | U 16 |
| 2 | U 11 |
| 3 | U 6 |
| 4 | U 3 |

To restart turn OFF/ON the instrument.

# SECTION FOUR ELECTRONIC DESCRIPTION

4.1.0
## SIGNAL PATH

Before describing in detail the single printed circuit boards which make up the electronics of the IL 943 the signal path will be described in brief. Figure 1 shows the block schematic of signal flow from the colouring of the flame to the displayed and printed result.
The various colours present in the flame as a result of the sample being analysed are detected via optical filters and transducers (photosensors) in the preamplifier sub-unit.
The output of these photosensors depend on the intensity of light received and therefore the quantity of the element ions in the sample being analysed.
The function of the preamplifier sub-unit is to filter, detect, convert and amplify the four colour intensities ($Na^+$, $K^+$, $Li^+$ and $Cs^+$) to provide electrical signals of the correct characteristics to be analysed by the SBC (Single Board Computer).
In the SBC the signals pass through an Analogue-to-Digital converter so that they can be processed by the microprocessor.
The process is essentially that of converting voltage signals into mmol/litre values of element ions measured.
From the SBC the signals are routed serially to the display board in which the results are processed and displayed on 7 segment Led displays and in parallel to the Printer/Sampler Board where they are processed and passed to the thermal printer for printing.

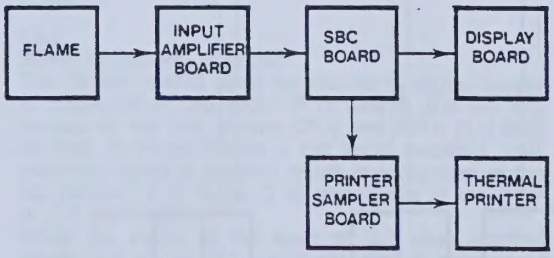


Fig. 1 Signal path

4.2.0
## POWER SUPPLY DESCRIPTION

The power supply board may be considered as a sub-unit with three different functions:
— Voltage regulator circuits
— Sensor section
— Power control section
The voltage regulator circuits provide the stabilized d.c. supplies required by the instrument as a whole.
The sensor section provides decoding of the signals from the single board computer and processing of the signals of major sensors in the fluidic/pneumatic section necessary to drive the power section.
The power control section contains the various transducers required to drive the motors, electrovalves and ignition circuits.
The block diagram of the power supply board is shown in Fig. 2a and 2b.
The circuit diagram is shown in drawings 14 and 15.
In the voltage regulator section four stabilized voltages are produced.
The + 5,1 V supply is used for the SBC (single board computer), Printer Sampler board and the Display board as well as for the various TTL circuits on the power board itself.
The +15V digital supply is used on the Printer/Sampler board and the Display board as well as for the low power side of the various power transducer circuits on this board and the dilutor solenoid valve.
The +15V and —15V Analogue supplies are used in the photosensor preamplifier unit and SBC.
An unregulated supply - Vpw (power) is also derived for use on the high power side of the various power transducer circuits.
The a.c. input to the +15V digital supply is used for driving the printer via the Printer/Sampler board.

4.2.1
### +5 V SUPPLY

The rectifier diodes and main filter capacitor for this supply are mounted separately from the power supply board which then receives the unregulated supply of approximately 13,5 V on P 11 pins 1, 2 and 3, 4.
The voltage regulator U 2, type LM 323 K, is completely protected by internal current limiting, to limit the output current to a safe value (nominal load approx. 2,5 A) and thermal protection, in that if the internal power dissipation becomes excessive the regulator shuts down to avoid over-heating.
The regulator is mounted on a heat sink.
The circuit contains a trimmer RV 1 by which the output voltage at nominal load can be adjusted to lie in the range 5,1 V - 5,25 V.

**Note:**
The manufacturers specification gives a tolerance of 4,75 V - 5,25 V for the output voltage of the LM 323.
RV 1 permits the adjustment of low value output voltages to be raised to a minimum 5,1 V but has no reducing effect on regulators whose output voltage lies above 5,1 V.
The nominal output ripple is less than 10 mV at 100 Hz.

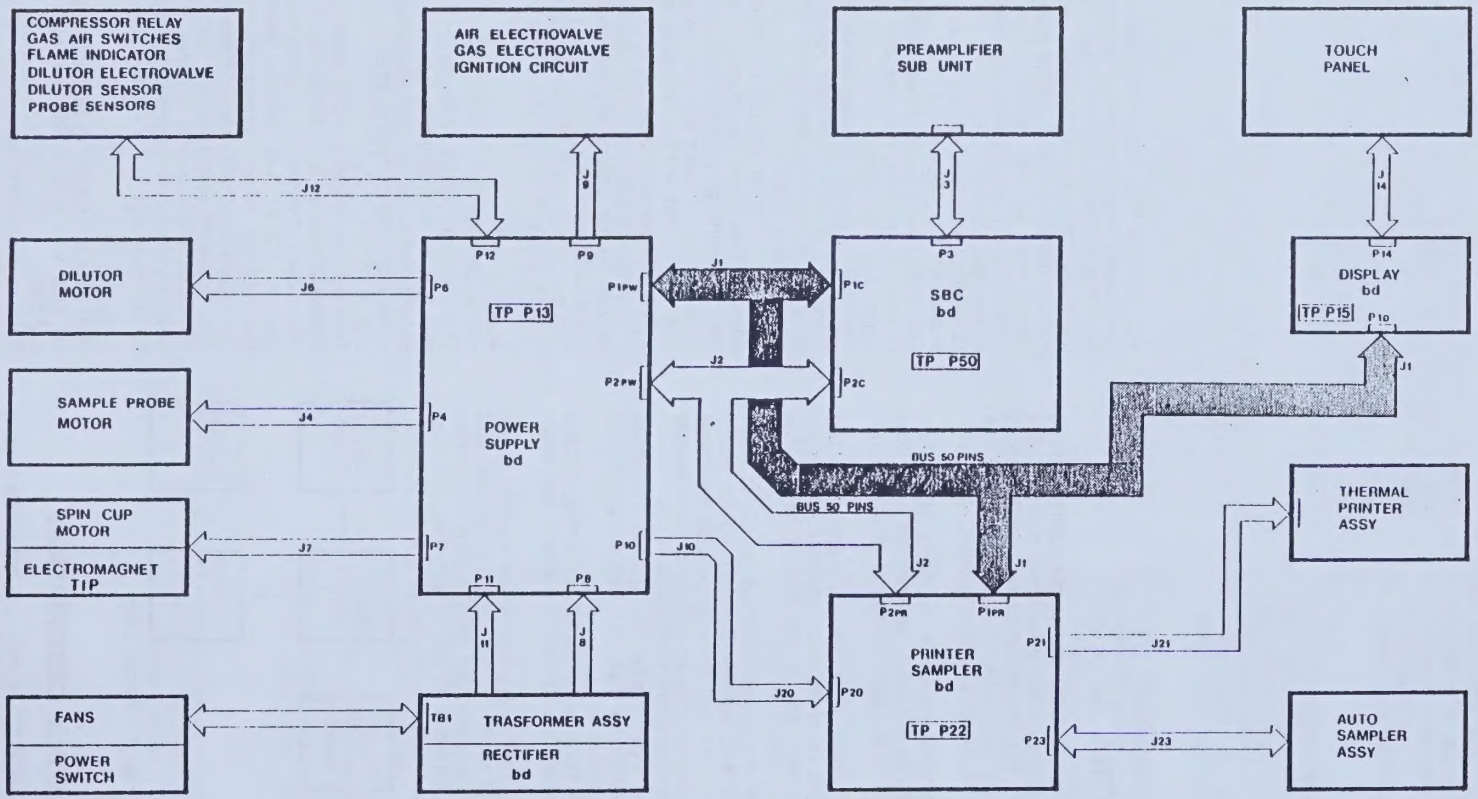


**GENERAL ELECTRIC BLOCK DIAGRAM**

4.2.2
**+ 15 V DIGITAL SUPPLY**
The a.c. input of approximately 20 Vrms connected to pins 8, 9 and 10 of P 11 is rectified by the diodes CR 2 and CR 3 (1N 4997) and filtered by C 23, 24 and 25.
The regulator U 1 (μA 7815) is internally protected against current overloads or short circuits and the output voltage in the range 14,4 to 15,6 Volts cannot be regulated.
The nominal ripple is less than 10 mV at 100 Hz.
The unregulated supply of approximately 28 Volts is tapped-off at the main filter capacitor C 23 and fed to output connector P 10 (pins 1, 2 and 3, 4) to supply the printer.

4.2.3
**± 15 V ANALOGUE SUPPLIES**
The a.c. input of approximately 18,4 Vrms is supplied to pins 5, 6 and 7 of connector P 11 and rectified in the bridge rectifier CR 1 (WS 01).
The positive and negative voltages of the rectifier are separately filtered by C 19 (with C 16 and C 17) and C 20 (with C 21 and C 46) to provide the unregulated inputs for the complementary regulators U 3, + 15 V (μA 78 M 15) and U 4, — 15 V (μA 79 M 15).
The output voltages which cannot be adjusted lie in the range 14,4 to 15,6 V (positive or negative as appropriate) and the nominal ripple voltage at 100 Hz is less than 10 mV.

4.2.4
**— Vpw**
The a.c. input of approximately 17,3 Vrms is supplied to pins 12, 13 and 14 of connector P 11, rectified in CR 9 and CR 10 (1N 4007) and smoothed in C 38 to give a D.C. supply of approx. 24 V.
The supply return, or power ground, is common with the returns for all elements in the power circuits and connected to the main electronic ground (chassis) via a 10 Kohm resistor R 67.
The a.c. input voltage for this supply is also used for the spinning cup motor.

4.2.5.
**OTHER SECONDARY SUPPLIES**
For convenience the remaining transformer secondaries of 24, 25,5 and 210 Vac are also routed via the power supply board to the various motors and solenoid valves (24 and 25,5 Vac) and the spark generator circuit (210 Vac).
The 24 and 25,5 Vac signals enter via P 8 pins 1, 3 and 4 and the 210 Vac on the same connector pins 5 and 6.

4.2.6
**ZERO CROSSING CIRCUIT**
The 20 Vac signal used for the 15 V digital supply is tapped-off at the input (P 11 pins 9 and 10) and passed to the two diodes CR 4 and CR 5 (1 N 914). At their common output a full wave rectified, unsmoothed signal is present which is integrated in the RC network R 8, R 10, C 30 connected to the base of Q 3 (MPSA 05).
When the signal at the base of Q 3 goes positive (each half cycle) Q 3 conducts and remains conducting until the end of the half cycle when the signal at the base falls below the base-emitter threshold voltage. The signal at the collector of Q 3 is therefore a series of positive going pulses (base line 0 V) synchronized with the supply.
This signal is inverted in the buffer stage IC 10 output pin 4 to provide the negative going pulse train required by the single board computer for synchronization of various instrument commands (output P2PW pin 13).

4.2.7
**SENSOR SECTION**
The sensor section of the power supply board may be sub-divided into two major groups:

— Processing of data bus signals from the single board computer.

— Processing of sensor signals from the fluidic/pneumatic section.

Considering the first major group the data bus signals are presented on P2PW pins 20 to 29 (dØ to d7) and pins 39 (MEMW/) 46 (IS6/) and 47 (IS7/). The signals dØ to d7 are fed as inputs to the dual HEX/1 in 8 decoder latch U16 (74LS373).
When latched, the outputs « a to h » (pins 2, 5, 6, 9, 12, 15, 16 and 19) are all at logic « 1 » (+ 5 V) with the exception of the output selected which will be at « 0 ».
Latching of the input command is accomplished by the signals IS7/ and MEMW/ (address select and memory write) which are combined in the OR gate IC 14 (output pin 3) and the buffer inverter IC13 (output pin 10) to drive U16 pin 11.
The action of U16 is further inhibited during flame ignition by the signal Coil Enable (output pin 8, U6).
The outputs of U16 are as follows:

| Output | Pin | Designation |
|---|---|---|
| a | 2 | Probe left command/ |
| b | 5 | Probe right command/ |
| c | 6 | Left cuvette command/ (Spinning-cup motor anti-clockwise spin) |
| d | 9 | Right cuvette command/ (Spinning-cup motor clockwise spin) |
| e | 12 | Gas valve command/ |
| f | 15 | Electromagnet tip command/ |
| g | 16 | Diiutor motor command/ |
| h | 19 | Air valve command/ |

All these signals are buffered in IC11 and 12 (7407) prior to being fed to the power control circuits.
The major sensors of the fluidic/pneumatic section processed by the power board are as follows:

— Gas switch (pressure switch)
— Air switch (pressure switch)
— Flame indicator (photosensor)
— Probe sensor A
— Probe sensor B
— Dilutor position sensor

4.2.8
**PNEUMATIC SENSORS**
Considering first the sensors concerned with the pneumatics (plumbing), i.e. Gas, Air and Flame, the circuits concerned with these sensors, together with the software, ensure correct operation under the following conditions of normal action and safety:

a)
Correct ignition of the flame.

b)
Lack of air pressure or incorrect operation of the air solenoid valve.

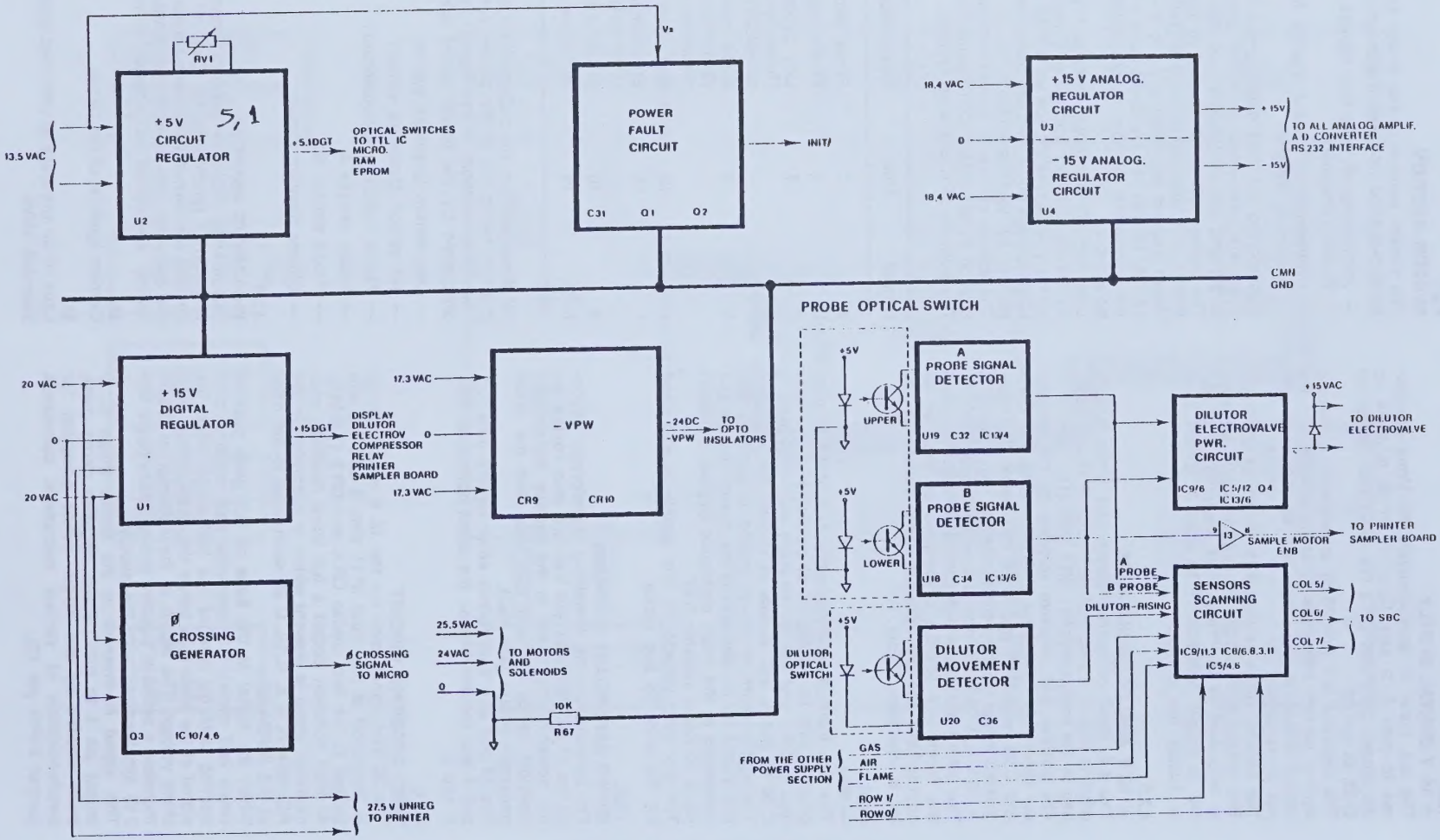


**Fig. 2a - POWER SUPPLY BLOCK DIAGRAM PART. 1**

c)
No ignition of flame.
d)
Shut down in case of lack of sufficient air.
e)
Shut down in case of lack of sufficient gas.
Timing diagrams "a" to "e" show the operations in each case.

4.2.9
**CORRECT IGNITION**
(see timing diagram « a »)
When the instrument is switched on, the initial reset signal (RESET, IC7/8) goes into the « 1 » state resetting all functions in the instrument.
When the flame key is pressed, the SBC sends the signal causing U16 pin 19 (Air valve Command/) to go to a « 0 ».
The compressor command/signal then goes to a « 0 » and the compressor starts up.
When the air pressure switch (Input P12 pin 11) detects the presence of pressurized air, the output IC10/10 goes to a « 1 ».
This signal is detected by the SBC (Column 6/, P1PW-35) and the gas command is given, assuming that gas pressure is present.
The gas signal IC10/8 is detected by the SBC via column 5/ (P1PW pin 33).
The gas command causes the gas valve/output of U16 (pin 12) to go to « 0 ».
This in turn causes the gas valve command/ (IC7/12) to go to a « 0 ».
At the same time as the air valve command is given the total time timer U15 is set on (total time, pin 3, goes to a « 1 »).
All conditions are now met for the ignition command to be given and the 20 milliseconds wide pulse at U6/5 is produced.
Timing diagram « a » shows the ignition of the flame after two attempts, at which point the flame photosensor detects the presence of the flame and sets the Flame signal (U17/3) to « 1 ». This signal is routed to the SBC via P1PW pin 36 (Column 7/).

4.2.10
**FAILURE TO IGNITE**
Timing diagrams « b » and « c » show the sequence of operations if ignition is not carried out correctly due to lack of air, incorrect operation of the air solenoid valve or failure of ignition, due to malfunction of the ignition circuit for example.
In the case of lack of gas pressure no actions are taken.

4.2.11
**SHUT DOWN CONDITIONS**
If at any time the gas or air pressure falls below prescribed limits (see plumbing description section 2.1.0), the flame is automatically shut down.
This sequence of events is shown in timing diagrams « d » and « e ».

4.2.12
**FLUIDIC SENSOR**
Considering the second block of sensors; these are concerned with the movement of the dilutor and sample probe and passing the relevant information to the single board computer or the printer/sampler board.
The optical sensors mounted on the probe assembly have the following truth table:

| A Sensor | B Sensor | Condition |
|---|---|---|
| 0 | 1 | Probe in Autosampler cuvette |
| 1 | 0 | Probe in Stat position |
| 1 | 1 | Probe in spinning cup |

The position of the probe or alternatively the condition of the probe sensors, inhibit the movement of the dilutor, should the probe be in the incorrect position independent of the software command.
The signals from each sensor are used to trigger the inverting circuits type 555.

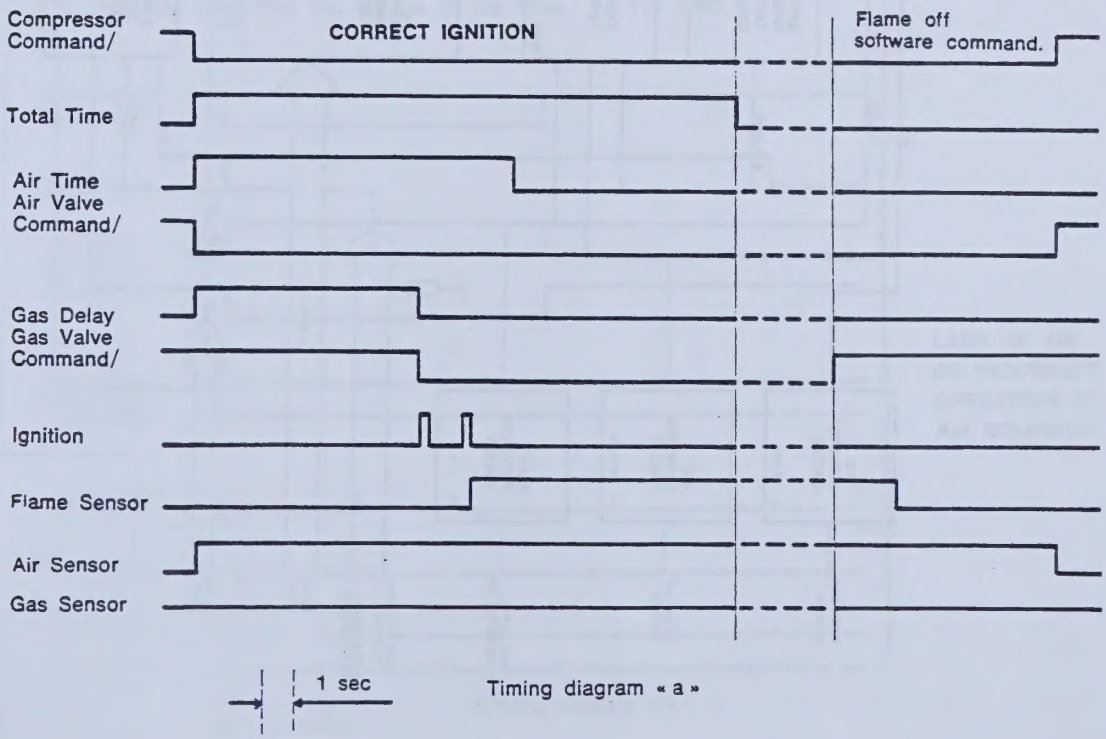


Timing diagram « a »

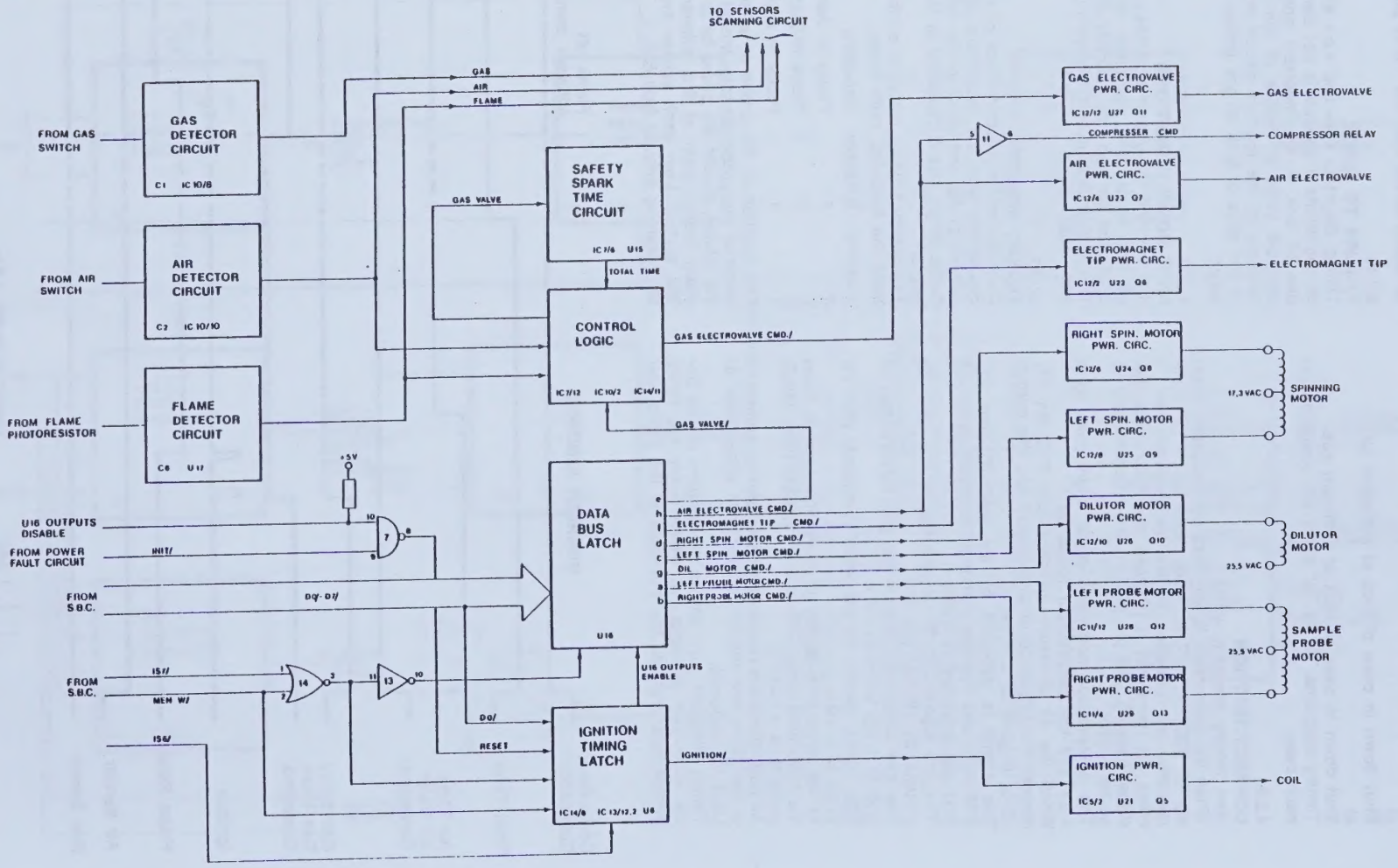


**Fig. 2b - POWER SUPPLY BLOCK DIAGRAM PART. 2**

The signal from sensor « A » triggers flip-flop U19, while sensor « B » triggers U18 and the dilutor optical sensor triggers U20.
The outputs of U18 and U19 are combined such that when the probe is in the spinning cup position, i.e. both sensors indicate « 1 », the output of IC5/12 is a « 1 » and Q4 conducts. The dilutor solenoid valve is then energized so that, when the dilutor pistons move upward, sample and diluent are transferred to the spinning cup (see Fluidic description section 2.2.0.).
The signals from U18, U19 and U20 together with the gas, air and flame signals from IC10 pins 8 and 10 and U17 pin 3, are continuously scanned by the SBC with the signals Row Ø/ and Row 1/ (Inputs P1PW42 and 43).
The scanning which takes place in IC's 5, 8 and 9 produces signals column 5/, 6/ and 7/ on P1PW pins 33, 35 and 36.
When Row Ø is called, i.e. Row Ø/ is « 0 », then columns 5, 6 and 7 copy the state of the gas, air and flame sensors respectively.
When Row 1 is called, i.e. Row 1/ is « 0 », then columns 5, 6 and 7 copy the state of the « B » probe sensor and « A » probe sensor respectively.

4.2.13
**INIT/ CIRCUIT**
Q1, Q2 and their associated components provide the initial reset signal when the instrument is switched on and in addition detect a drop in the + 5,1 V digital supply below the level of 4,3 Volts thus preventing malfunction of the instrument in the case of supply failure for short periods of time, i.e. ½ to 1 cycle of the mains.
The driving voltage for the circuit, Vx, is the full wave rectified signal which drives the + 5,1 V digital regulator.
When the instrument is switched on this signal rises and the output voltage of the 5,1 V supply follows closely.
The signal at the positive pole of C31, however, is retarded by a time delay, determined by R11, R12 and C31 (and CR6 in the discharge mode).
It is therefore clear that the voltage at the base of Q1 is lower than the voltage of the emitter and Q1 is « On » for a period proportional to the time delay.
When Q1 is « On », Q2 is « On » and the signal INIT/ is low.
Since under normal stable conditions Vx is greater than + 5,1 Volts by a significant amount, even allowing for the attenuation formed by R12, R13, it is necessary to protect the base-emitter junction of Q1 by diode CR7.
Under these conditions Q1 is « Off » and therefore Q2 is « Off » causing the signal INIT/ to be high, « On ».
The change Off-On of Init/ is used to reset the SBC and any other necessary latches (e.g. U16 on this board).
In the case of power failure, the base of Q1 falls at a faster rate than the emitter and causes Q2 to switch-on when the emitter voltage of Q1 is at approximately 4,3 Volts.
Since the computer circuits demand a minimum voltage of 4,25 Volts for correct operation, this action ensures that when power failure occurs the SBC is correctly inhibited and that it will be reset to « start conditions » when the power returns to normal conditions.

4.2.14
**POWER CONTROL SECTION**
The Power Control section consists essentially of seven identical circuits for the control of the tip, spinning cup, dilutor motor and the Gas and Air Solenoid valves, together with two other circuits for the control of the motor probe and the ignition coil.
Considering the motor and valve control circuits first, the command signals from the decoder latch in the sensor section (U16) are fed to the diode cathode connections of opto-isolators type TIL 113. When the signal on pin 2 of the TIL 113 is zero the diode conducts and the light received by the opto-transistor causes it to conduct drawing pin 5 to -Vpw. This negative voltage is attenuated in a resistive network and applied to the gate of a triac type TIC 206D.

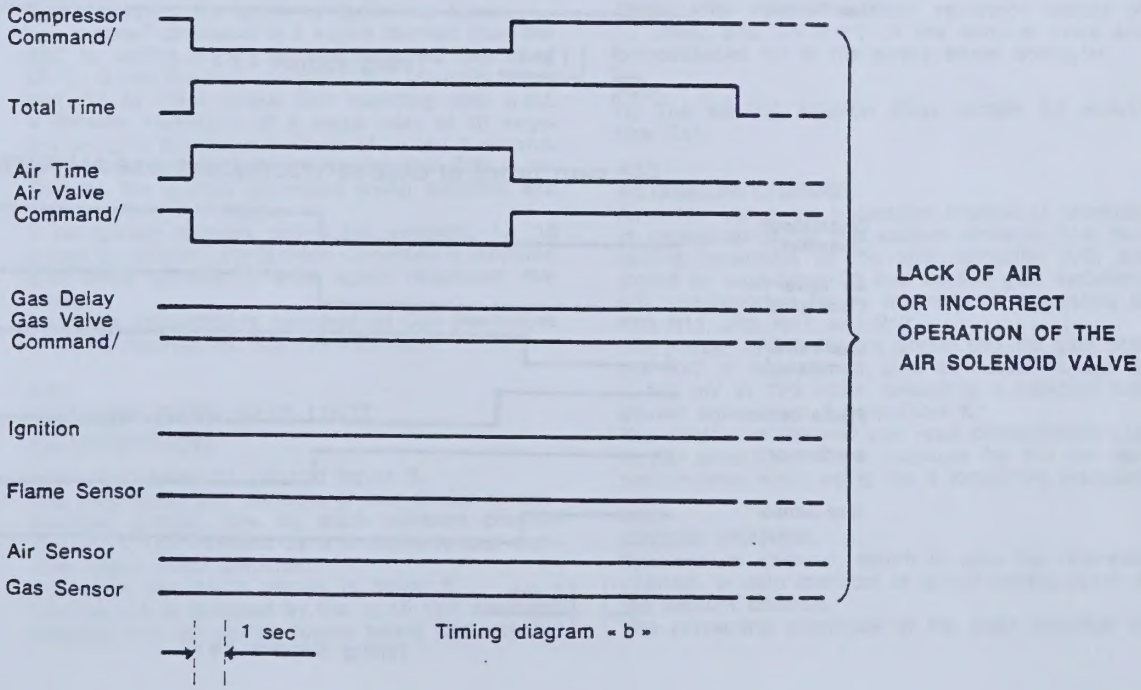


Timing diagram « b »

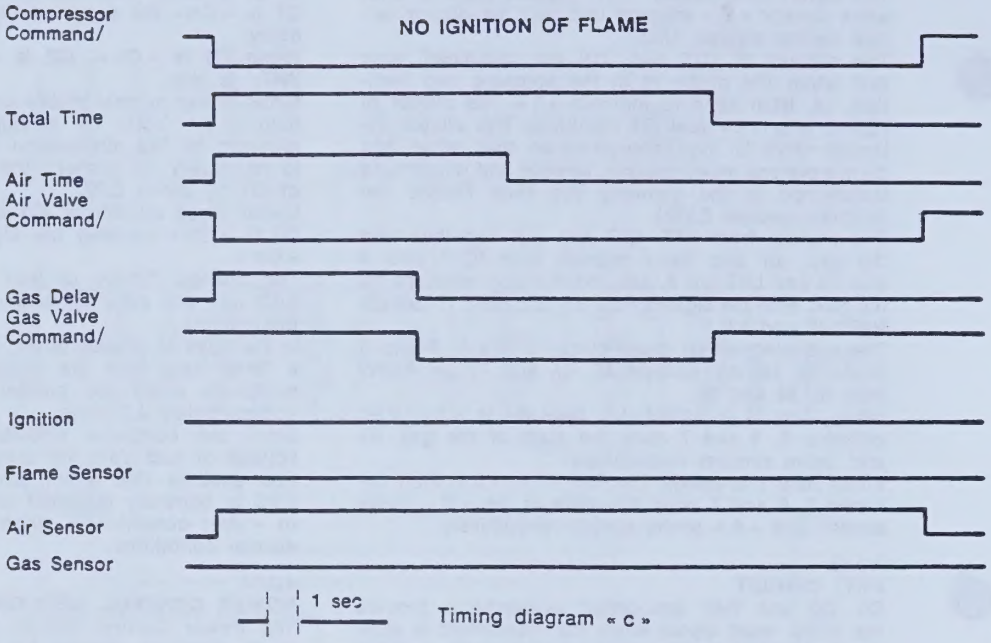


Timing diagram « c »

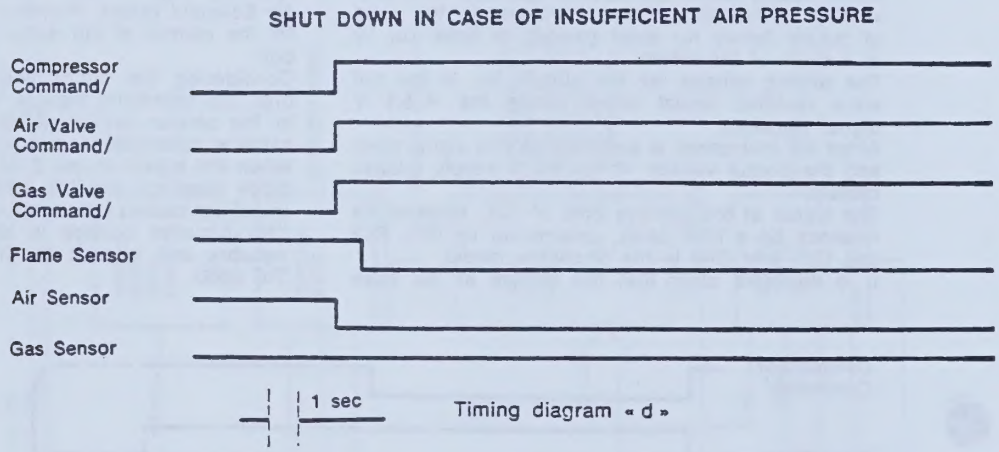


Timing diagram « d »

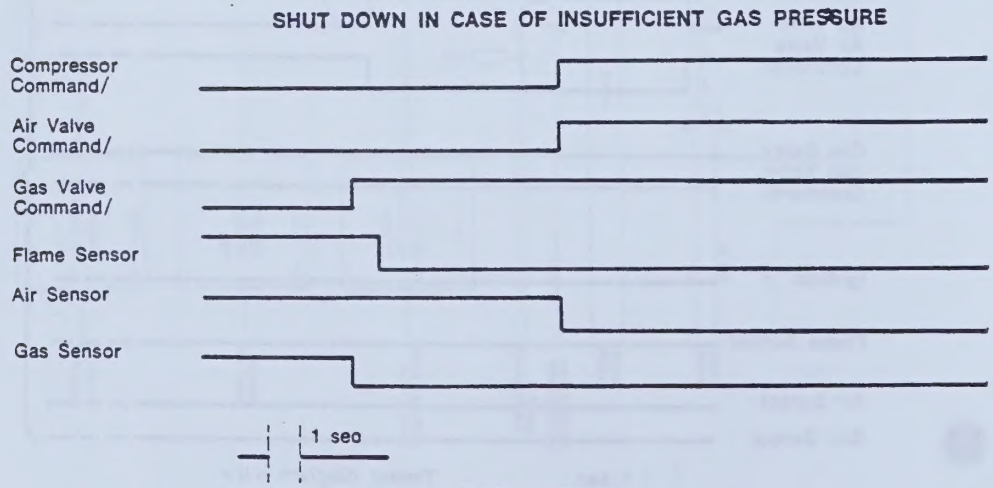


Timing diagram « e »

As the command signals are synchronized to the mains zero crossing, the triacs are set into the conducting mode when the voltage at M2 is a minimum and the relative motor or valve circuit is then closed causing the appropriate motor or valve to be activated.
In the case of the bidirectional motors the clockwise and anticlockwise command circuits are connected to the relevant windings of the motors and to each other by the phasing capacitors C41, C42 and C45.
Protective diodes on the phototransistors and snubber circuits on the triac outputs protect against damage due to switching spikes and rapid rates of change of voltage.
The spinning cup tip circuit consists of an identical opto-isolator whose output transistor drives the tip electromagnet via a darlington buffer amplifier type TIP 120.

4.2.15
**THE IGNITION POWER CIRCUIT**

The ignition power circuit consists essentially of the charge/discharge capacitor C39 connected into the circuit of the spark generator coil and whose discharge is controlled by an opto-isolator/diac (Q5) circuit. So long as no ignition is requested the ignition/ command (IC5 pin 2) is at a logic « 0 » and the diode of the opto-isolator TIL 113 conducts.
This causes the opto-transistor to conduct and the potential at pin 5 of the TIL 113 (TP2) remains connected to the zero line of the 210 Vac supply (P8 pin 5).
The half-wave rectified signal from CR12, R36 is therefore inhibited from driving the diac Q5 via CR25.
When the ignition command is given the opto-transistor of the TIL 113 goes into a high impedance state and the next positive half wave signal can pass through CR25 to send Q5 into conduction.
In the meantime C39 has been charged by the half-wave rectified signal via CR3, and TP4 will be at a potential of approximately 300 V.
When the diac Q5 goes into the conducting state C39 discharges through the ignition coil which is connected between pins 4 and 5 of connector P9, thus generating the spark to ignite the flame.
The ignition/ command is a signal derived from the SBC by writing a « 1 » on the output Q (pin 5) of U6 (½ Q type flip-flop) using MEMW/ (memory write) and IS6 as clock imput and resetting with d Ø/. It consists essentially of a pulse train of 10 negative going 20 millisecond pulses of period 1 second. If the flame fails to ignite the capacitor C39 is recharged, the ignition command being disabled and another attempt is made.
If no ignition occours within ten seconds, i.e. 10 pulses on ignition/, the ignition command is inhibited until flame ignition is once again requested manually.
When the instrument is switched off C39 discharges in 20/30 seconds via R38 (10 MOhm).

4.3.0
## PREAMPLIFIER SUB UNIT DESCRIPTION

Refer to Drawing 17, 18 and figure 3.
The preamplifier unit consists of four similar sensor-amplifier circuits, one for each element channel (Na, K, Li, Cs), followed by a multiplexer and common output driver amplifier.
The block diagram is shown in figure 3.
The sub-unit is powered by the ± 15 Volt analogue supplies from the power supply board and channel selection, on a scanning basis, is generated by the single board computer.
The sodium, potassium and cesium channels are all identical in circuit configuration, varying only in gain, whilst the lithium channel has provision of both offset and gain setting.
Provision is made for changing the circuit configuration of the sodium, potassium and cesium channels in case of non-availability of the input amplifier (ICL7650). In this case these channels are similar to the lithium channel.
The following detailed description of each channel is based on the normal version. Section 4.3.5, however describes the differences to be found in the alternative version.

4.3.1
**SODIUM CHANNEL**

The sodium channel uses a photosensor type Hamamatsu 874/8K (or Centronic OSD15) driving a chopper stabilized operational amplifier type ICL 7650 (U1). This latter component has an extremely low offset achieved by comparing the inverting and non-inverting input voltages in a nulling amplifier, nulled by an internal clock on alternate clock phases. The two correcting potentials are stored on capacitors C2 and C3 (0.1 microF). The clock frequency is approximately 200 Hz.
Variations in the gain of the sensor and amplifier stage are compensated for in the output/feedback network consisting of R3, JR4, RV10 and R4.
The jumper (JR4) position is factory preset and the gain control RV10 is adjusted to give a voltage of — 2.96 Volts at TP 4 when measuring a standard prediluted solution of 140 mmol/litre $NA^+$ (1).
The supply voltages to the ICL7650 are + 5,6 V and — 9 V nominal (see section 4.3.7).
In worst case conditions the maximum negative voltage output of the channel is limited at — 7,9 Volts and this is the signal level considered at the maximum level of Sodium measuring capability i.e. 200 mmol/litre.
Variations in the signal caused by flame conditions and aspiration rate can result in a minimum output voltage of — 1,86 Volts under the same conditions of a 200 mmol/litre signal.
These total variations which represent factors of 1,7 (max) and 0.4 (min) on the nominal value are compensated for in the single board computer.

**Note:**
(1) The diluting solution must contain 1,5 mmol/litre $Cs^+$.

4.3.2
**POTASSIUM CHANNEL**

As noted above the potassium channel is identical, in configuration, to the sodium channel. The correcting potentials of the input amplifier (U2) are stored on capacitors C5 and C6 and gain variations are compensated for by the network consisting of R10, R11, JR3, RV7, and R12.
The jumper JR3 is factory preset and the gain control RV7 is adjusted to give an output voltage of — 143 mV at TP3 when measuring a standard prediluted solution of 5 mmol/litre $K^+$.
The potassium channel can read concentrations up to 200 mmol/litre which accounts for the low calibration level when using the 5 mmol/litre standard.

4.3.3
**CESIUM CHANNEL**

The cesium channel, which is also the reference channel, is also identical in circuit configuration to the sodium channel.
The correcting potentials of the input amplifier U4

are stored on the capacitors C9 and C10 and gain variations are compensated for in the network consisting of R29, R30, JR1, RV2 and R31.
The cesium reference is the diluent solution which has a concentration of 1,5 mmol/litre $Cs^+$.
As for the previous channels the jumper JR1 is factory preset and the potentiometer RV2 is adjusted to give an output voltage of —4,23 Volts at TP1 when measuring a prediluted solution containing all other standard calibrants i.e. 140 mmol/litre $NA^+$, 5 mmol/litre $K^+$ and 1 mmol/litre $LI^+$.

4.3.4
**LITHIUM CHANNEL**
The lithium channel uses a photosensor type Centronic OSD60/ST followed by an input amplifier type AD3731 (OP103A).
This latter component is a dual-fet operational amplifier with extremely low input bias current. Zero offset is achieved by the correcting trimmer RV 5 and is factory preset. Variations with life of the circuit will not require adjustment of this trimmer.
This channel has provision for both offset and gain control.
Offset is regulated by the network comprising R21, R22 and RV3. (JR6 is only used during factory test). RV3 is adjusted to give an output voltage of —150 mV at TP2 when measuring a prediluted solution of 140/5/0 mmol/litre of $sodium^+$/$potassium^+$/$lithium^+$ respectively.
The gain control is determined by the network R23, R24, RV4, JR2 and R25.
As for all other channels the position of the jumper (JR2) is factory preset and the gain is adjusted by RV4 to give an output voltage of —631 mVolts at TP2 when measuring a prediluted solution of 140/5/1 mmol/litre of $Sodium^+$ / $Potassium^+$ / $Lithium^+$ respectively.

4.3.5
**ALTERNATIVE CIRCUIT ARRANGEMENT**
Provision is made on the printed circuit board for mounting the AD3731 in place of the ICL7650 used for the sodium, potassium and cesium channels in the standard version.
In this case the correcting potential capacitors connected to pins 1 and 8 of the ICL7650 (U1, U2 and U4) are replaced by offset trimmers RV1, RV8 and RV9 connected between pins 5 and 1 of the AD3731. These trimmers are factory preset and should not need touching during the operational life of the circuit.

4.3.6
**MULTIPLEXER CIRCUIT**
The multiplexer circuit consists of the multiplexer itself (U5) type DG 508 followed by a buffer amplifier type LM301A.
Due to the wide range of signals to be measured in the sodium and potassium channels (0-200 mmol/litre) two gain settings for sodium and four for potassium are provided.
Choice of the appropriate setting is determined by the computer itself.
The following table shows the selection patterns.

| Channel | Input Pin DG508 | Selected signal state SELØ | SEL1 | SEL2 | Gain V. | Out max |
|---|---|---|---|---|---|---|
| NA x 1 | 4 | Ø | Ø | Ø | 1,1 | 9,860 V |
| NA x 2 | 5 | 1 | Ø | Ø | 2,15 | 4,730 V |
| Kurine x 1 | 6 | Ø | 1 | Ø | 1,1 | 9,910 V |
| Kurine x 2 | 7 | 1 | 1 | Ø | 2,15 | 4,820 V |
| Kserum x 1 | 12 | Ø | Ø | 1 | 8,66 | 9,860 V |
| Kserum x 2 | 11 | Ø | Ø | 1 | 14,34 | 4,820 V |
| LI | 10 | Ø | 1 | 1 | 0,93 | 9,700 V |
| Cs | 9 | 1 | 1 | 1 | 1,1 | 9,859 V |

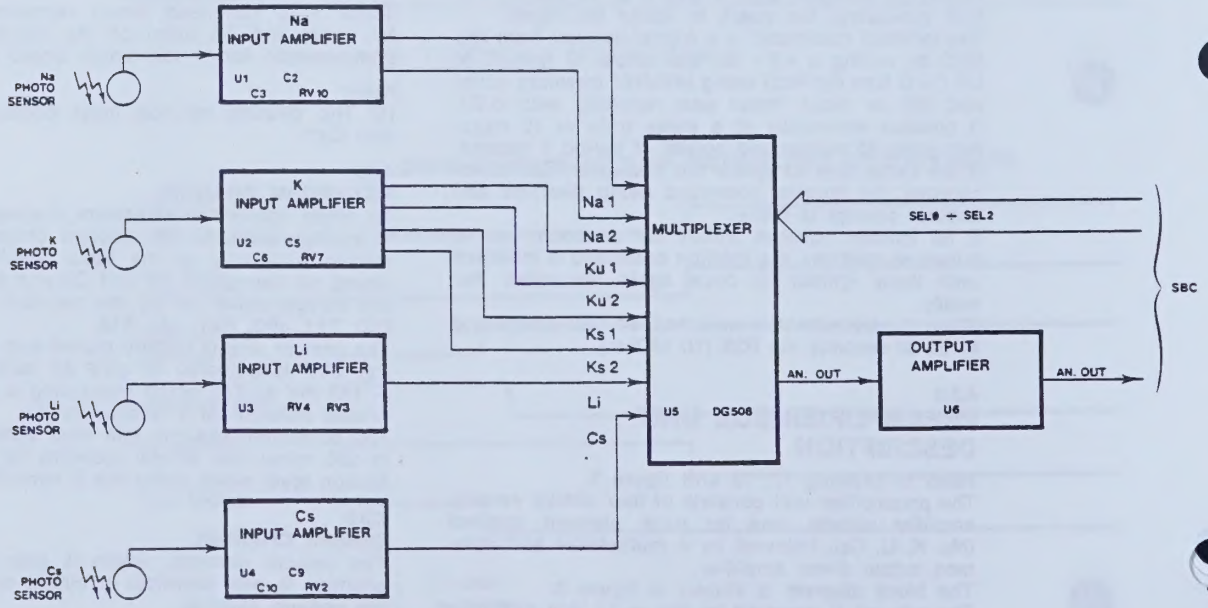


**Fig. 3 - PREAMPLIFIER SUB UNIT BLOCK DIAGRAM**

The scanning signals are enabled for 125 microseconds every 2 milliseconds as required by the computer.
The Vout max figured before are those for the maximum signal output at the test point (TP5) of the four channels. The saturation value is nominally 10 Volts.

4.3.7

**ICL7650 SUPPLY VOLTAGE CIRCUIT**

When the input amplifier type ICL7650 is fitted, as in the normal case, the necessary supply voltages of + 5,6 V and — 9 V are generated by two zener circuits consisting of R39, CR 1 (BZX79C5V6) and R40 CR2 (1N936) for the + 5,6 V and — 9 V lines respectively.
The inputs to these circuits are the ± 15 Volts analogue supply used for all other parts of the circuit.
If the input amplifiers are all of the type AD3731 the zener diode circuits are not fitted and all amplifiers are driven directly from the ± 15 V analogue supply.

4.4.0

## PRINTER SAMPLER BOARD DESCRIPTION

Refer to diagrams 20 and 21.
The Printer Sampler Board circuits may be divided into three main groups:
a) the interface with the single board computer
b) the printer driver/sensor circuits
c) the autosampler driver/sensor circuits
The first group is essentially straightforward while the other two groups are subdivided into smaller circuit functions.
Power for this board is provided by all the regulated supplies from the power supply board (± 15 V analogue, + 5 V and + 15 V digital) together with the unregulated DC supply of approximately 27,5 Volts which is used for the generation of the + 15 Volts printer supply produced on this board.
The block diagram is shown in figure 4.

4.4.1

**SINGLE BOARD COMPUTER INTERFACE**

The heart of the interface circuitry is a programmable peripheral interface chip type 8255A (U17). This device is addressed (AØ, A1, IS3/J) and commanded (DØ - D7, MEMW/) by the single board computer via bus connections P2PR.
The interface chip is used as an uni-directional device, the ports PA, PB and PC being used as outputs to the Printer Sampler circuitry.
The read input RD/ Pin 5 IC17 is therefore connected permanently to logic « 1 » as the SBC does not need to read from the interface.
The following table shows the basic operation functions used on this board.

| A1 | A0 | WRITE MEMW/ | CHIP SELECT IS3/ | |
|---|---|---|---|---|
| 0 | 0 | 0 | 0 | Data Bus → Port A |
| 0 | 1 | 0 | 0 | Data Bus → Port B |
| 1 | 0 | 0 | 0 | Data Bus → Port C |
| 1 | 1 | 0 | 0 | Data Bus → Control |
| X | X | X | 1 | Data Bus → 3-State |
| X | X | 1 | 0 | Data Bus → 3-State |

The eight bit ports (A, B and C) are used as follows:

| | |
|---|---|
| PAØ/ - PA4/ | Dot drivers |
| PA5/ | Sampler motor circuit |
| PA6/ | Printer supply (dot fail) circuit |
| PA7/ | Cup detector circuit (sampler) |
| PBØ/ - PB7/ | Printer column drivers |
| PCØ/ - PC3/ | Printer column drivers |
| PC4 - PC7 | Printer stepping motor |

Other signals concerned with the interface between the SBC and this board are the scanning signals SLØ/ and SL1/ generated by the single board computer and used together with the signal ROW3/ from the display board to provide the sensor scanning signals (Col 5, 6 and 7) which are routed to the SBC.
In addition IS4/ and INIT/ from the SBC are used to reset the Dot Alarm circuit and the interface respectively.

**Sensor scanning circuit**

See also display board description section 4.5
The single board computer scans the state of the column signals COL5/, COL6/ and COL7/. These column signals are energized when the ROW3/ signal, from the display board via inverting buffer U 11/4, is at logic 1.
The state of the column signals then report the states of the Cup presence, plate position and dot alarm signals generated in this board (see sections 4.4.3 and 4.4.2).

4.4.2

**THE PRINTER CIRCUIT**

The printer circuit may be subdivided into the following groups.

a) Column drivers (U18 and U19)
b) Dot drivers (U9 and Q21 - Q25)
c) Printer head safety circuit and flip-flop
d) Stepper motor power circuit (Q1 - Q12 etc.)
e) Printer supply circuit

The thermal printer itself (type EPN 9112) has 12 beam lead silicon chips with five dots per chip.

a)

**Column drivers**

Ports PBØ - PB7 and PCØ - PC3 are used since they can provide the necessary source current capability (1 mA at 1,5 V) to drive directly the Darlington buffer transistor arrays (L203) U18 and U19 which are connected via P21 (26 pin) to the printer itself. (Signals DD1/ to DD12/).

b)

**Dot drivers**

The port signals PAØ/ - PA4/ from U17, the interface chip, are passed through five open collector buffer stages (U9/2, 4, 6, 8, 10) to drive 5 transistor Darlingtons (TIP 125) Q21 - Q25.
The emitters of the Darlington stages are connected to the + 15 V printer supply generated on this board and when conducting, energize the five dot lines E1-E5 (connector P21) as commanded by the port signals.

c)

**Printer head safety circuit and flip-flop**

The dot drivers are normally energized for 26 milliseconds every 150 millisecond during printing. The energizing of a dot for more than 30 milliseconds can cause permanent damage to the printer itself. Since a failure (short circuit) of one of the driver stages (Q21 - Q25), a similar failure in the buffer stages (U9), or an error in sofware, could produce this effect a fail safe circuit is provided which shuts

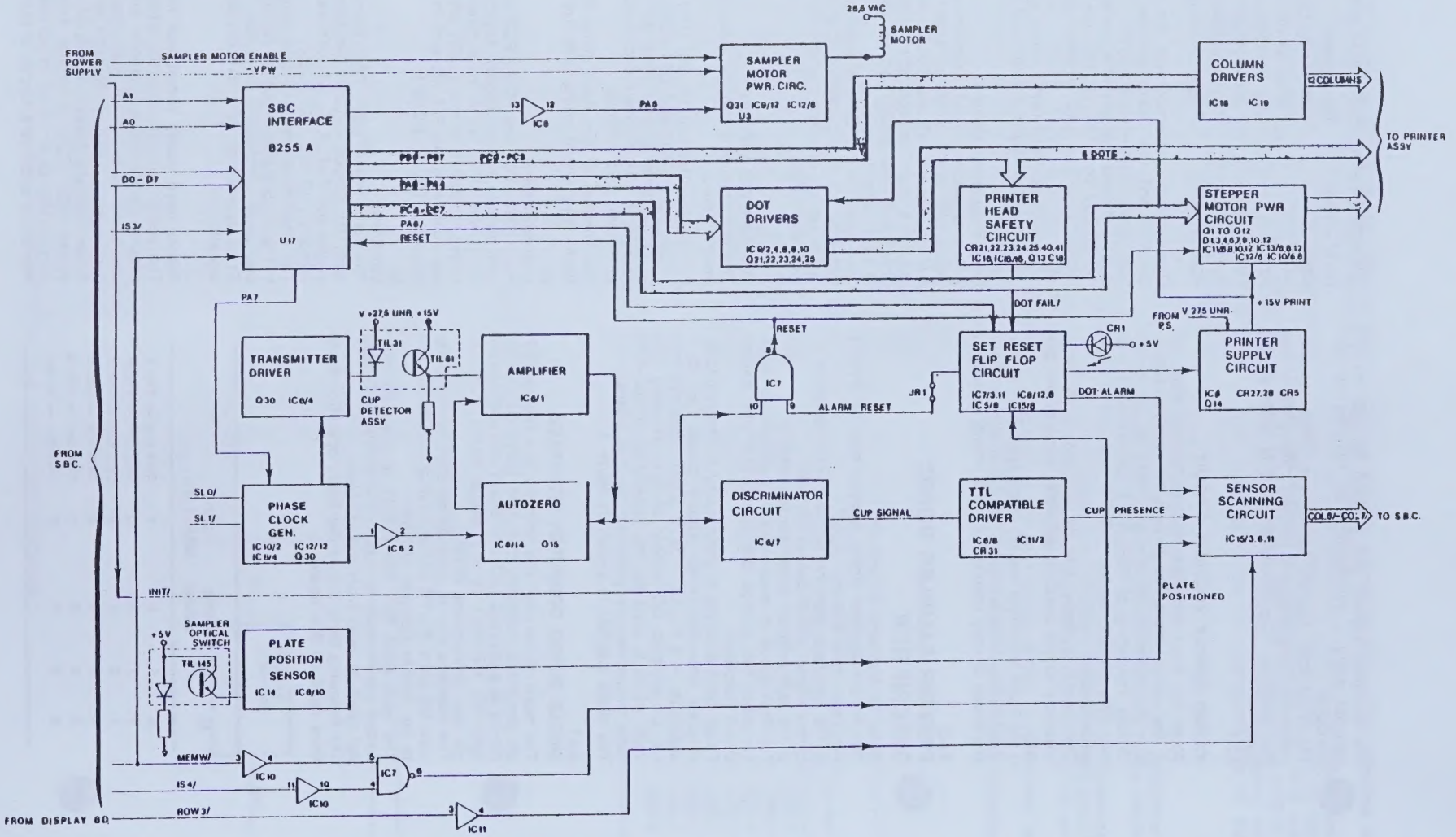


Fig. 4 - PRINTER SAMPLER BLOCK DIAGRAM

down the +15 V printer supply in the case of dots energized incorrectly.
The dot drive signals E1 - E5 are combined in an « OR » gate (CR21 - CR25) whose output (P22/1) goes to the « 1 » state (positive) every time a dot is energized. This signal is inverted in U18/16 and used to switch on transistor Q13 thus discharging capacitor C18.
C18 is the charge capacitor in the monostable circuit consisting of the timer circuit U16 (type 555) and the resistor R111.
The capacitor is charged from the + 5 V supply via R111 (57,6 Kohm).
If the voltage on C18 reaches the threshold of U16 (i.e. approx 3,4 V), U16 is triggered and an impulse on the output (pin 3) will signal dot failure.
This conditions will occur if Q13 does not discharge C18 at regular intervals as determined by the dot circuit drivers.
The dot failure/signal on U16 pin 3 is used to set the flip-flop U7 (74LS132) which in turn enables the following functions:

i - sets the dot fail Led (DL1) « On » via U8 pin 12

ii - resets the printer interface U17 via U8/8 and U7/8 (note: jumper JR1 is used during testing of the dot fail circuitry).

iii - provides the dot alarm signal to the SBC via U15/11 (Col 7/)

iv - shuts down the + 15 V printer supply via U15/8 and Q14 (see section « e »).

The dot failure flip-flop is reset by the SBC using the signals MEMW/ and IS4 of the data bus via U7 pin 6.

d)
**Stepper motor Power circuit**
This circuit is composed of two parts.

— Logic circuitry controlled by the interface (U17) to produce the correct phase commands, M1 high, M2 high, M3 high and M5 high, for the stepper motor.

— Power circuitry to drive the windings of the stepper motor.

Considering first the logic circuits, the port signals PC4 and PC6 are used to determine the phase of the drive signal to the motor, whilst PC5 and PC7 are used to switch off the power to the motor while it is at rest or during switching of the phase.
Observing the circuit for winding 1, inputs PC4, PC5 and reset, we note that U11 pin 8 will be at logic « 1 », thus switching on Q2, when PC4, PC5 and reset/ (U10/6) are all « 1 ».
When the state of PC4 changes to a « 0 » U11 pin 8 is at « 0 » but U11/6 is at « 1 » thus switching on Q5.
During initial reset (INIT/), or in the case of dot alarm, the signal on U7/8 (Reset) goes to a « 1 » thus causing all input gates for the logic circuitry to be held at logic « 0 » inhibiting the power drivers.
The power circuit of winding 1 consists of Q1 - Q6 with associated circuits. When Q2 is « On » Q5 is « Off » and the base of Q6 is then at zero with respect to the emitter causing Q6 to be « Off ».
At the same time Q1 is conducting and pin M1 of the motor winding is therefore at about ground potential. Q2 being « On » causes the base of Q3 to be negative with respect to emitter causing it to conduct. Since Q4 at this stage is « Off » pin M5 of the motor is at + 15 V printer and current flows through the winding from M5 to M1.
The complete current path is therefore + 15 Vpr, Q3, M5, M1, Q1, R45, printer ground.
R45 protects the various transistors in the power circuit from overload due to excess current caused by fault conditions.
Diodes CR1, CR3, CR4 and CR6 protect the various transistors from inductive positive or negative spikes from the winding which might damage them.
The operation of the winding 2 circuit, comprising the logic signals PC6, PC7, Q7 - Q12, is identical with that for winding 1.
The relationship between the logic signals, the state of the power driver transistors and the polarity in the windings is shown in the following table.

| PC4 | PC5 | M5H | Q1, Q2, Q3 | M1H | Q4, Q5, Q6 | M1 | M5 |
|---|---|---|---|---|---|---|---|
| 1 | 1 | 1 | ON | 0 | OFF | 0 | + |
| 0 | 1 | 0 | OFF | 1 | ON | + | 0 |
| X | 0 | 0 | OFF | 0 | OFF | X | X |

| PC6 | PC7 | M2H | Q10, Q11, Q12 | M3H | Q7, Q8, Q9 | M3 | M2 |
|---|---|---|---|---|---|---|---|
| 1 | 1 | 1 | ON | 0 | OFF | 0 | + |
| 0 | 1 | 0 | OFF | 1 | ON | + | 0 |
| X | 0 | 0 | OFF | 0 | OFF | X | X |

e)
**Printer supply circuit**
The 15 V regulated supply required by the printer dot and motor circuits is produced by driving regulator ICØ (LM317T) from the unregulated 27,5 V signal from the power supply board (P20/1, 2, 3, 4).
The output voltage is fixed by the resistor feedback network consisting of R5 (100 Ohm).
In the case of dot alarm the base of Q14 which is connected in parallel with R105 is driven positive and Q14 conducts short circuiting R105. The output voltage + 15 Vpr is then reduced to approximately + 1,5 V thus protecting the printer head and motor.

4.4.3
**THE AUTOSAMPLER CIRCUITS**
The autosampler circuits comprise the following subsections.

a) The plate position sensor

b) the cup presence sensor which contains the transmitter amplifier and autozero circuit, discriminator, TTL compatible driver and the phase clock generator

c) the sampler motor power circuit.

a)
**The plate position sensor**
Within the autosampler assy (drawing n° 2), an optical switch type TIL 145 detects the presence of holes in a disk which is mounted onto the sampler motor rotor.
The signal from the optical switch (P23/9) passes to the input of the timer U14 (type 555) connected as a monostable. When the plate is in the correct position the timing capacitor C23 charges and an impulse is sent from the output of IC14 (pin 3) via the buffer stage U 8/10 to the sensor scanning circuit thus informing the SBC of the correct positioning of the plate.

The plate disk has four holes and it is not coded, the detector, therefore, only indicates the correct positioning of any one cuvette. The single board computer then counts or calculates the number of cuvette or cuvette positions that the plate has moved (see autosampler section 4.8.0).

b)
**Cup presence sensor**
This circuit may be described in its various functions as follows.
The scanning signals from the single board computer SLØ/ and SL1/ are combined in IC12/12 to produce a, so-called, « photodetector clock » which by controlling in turn Q30 and Q15 synchronize the action of the transmitter and receiver circuits of the sensor.
The duty cycle of this « clock » signal is 25%.
When Q30 (TIP 120) is switched on a constant current passes through the Gallium Arsenide Infrared-Emitting diode (TIL 31) which is mounted in the autosampler assembly as the transmitter.
The receiver, which is a silicon photo-transistor (TIL 81) detects the light transmitted by the TIL 31 via an infrared filter and can thus detect the presence or absence of a cuvette.
The receiver feeds the input on an operational amplifier LM324 (U6) whose output (pin 1) is synchronized by the action of Q15.
The feed back loop of this amplifier contains a further stage of the LM324 (pin 14) such that the non-synchronized average level of signal is eliminated (Autozero). In this way all stray light signals or variations in intensity of the TIL 31 and filter are eliminated.
The output at U6/1 therefore varies only in function of the transmittance of the medium (cuvette or air) placed between the transmitter and receiver.
The following stage (U6/7) functions as a discriminator between the "cuvette" and "no cuvette" signals and integrates the information in the RC circuit R20, R21, and C20.
The final stage (U6/8, CR31, U11/2) operates as an amplifier and TTL compatible driver whose output signal (cup presence) is fed to the sensor scanning circuit.

c)
**Sampler motor power circuit**
The sampler motor enable signal from the power supply board is combined with the signal PA5/ from port A of the interface in the Nand circuit U12 (output pin 8).
When the sampler motor enable and PA5 (IC5 pin 12) are both « 1 » the open collector output of U9/12 is at a « 0 » and the photodiode of the opto coupler (TIL 113) conducts. The photo transistor in the same opto coupler therefore conducts causing the triac Q31 (TIC 206D) to be at low impedance causing the sampler motor to be energized by the 25,5 Vac supply.
The sampler motor enable signal ensures that the motor can only rotate when the sample probe is in the Stat or Spinning Cup position. (See power description Section 4.2.12).

4.5.0
## DISPLAY AND KEYBOARD DESCRIPTION

Refer to display block diagram (figure 5a) and key-sensor scanning diagram (figure 5b) the circuit diagram of the display board is shown in drawing 7 and 8.
The display board may be considered as a matrix driver for the various 7-segment displays and leds mounted on the board and as input (Row) driver for the touch panel, printer/sampler board and power supply board whose outputs (columns) are then fed to the single board computer.
The matrix driver consists of two principal sections:

1) The row driver.
2) The segment driver.

The row driver comprises a binary « 1 in 8 » demultiplixer followed by two buffer arrays in parallel, one for the display and the other for the touch panel, printer/sampler board and power supply board.
The segment driver, which is only used for the displays, consists of a serial-parallel converter followed by a buffer system.

4.5.1
**THE ROW DRIVER**
The demultiplexer U5 (74LS138) decodes the binary signal on SL0/, SL1/ and SL2/, which come from the single board computer producing a low on the selected output line all other lines being high.
Demultiplexing takes place when the enable signal (SL3/) is low and the reset signal INIT/ is high.
At instrument switch-on, or in the case of power fail a low is generated on INIT/ (see power supply description section 4.2.13) resetting all demultiplexer outputs high irrespective of the state of the enable signal (SL3/).
The following table shows the truth table of the multiplixer.

**MULTIPLIXER TRUTH TABLE**

Inputs

| enable | | select | | | | | | | | | |
|---|---|---|---|---|---|---|---|---|---|---|---|
| INIT/ | SL3/ | SL2/ | SL1/ | SL0/ | Row 0/ | Row 1/ | Row 2/ | Row 3/ | Row 4/ | Row 5/ | Row 6/ | Row 7/ |
| X | H | X | X | X | H | H | H | H | H | H | H | H |
| L | X | X | X | X | H | H | H | H | H | H | H | H |
| H | L | L | L | L | L | | | | | | | |
| H | L | L | L | | | L | | | | | | |
| H | L | L | | L | | | L | | | | | |
| H | L | L | | | | | | L | | | | |
| H | L | | L | L | | | | | L | | | |
| H | L | | L | | | | | | | L | | |
| H | L | | | L | | | | | | | L | |
| H | L | H | H | H | | | | | | | | L |

All empty squares are H (high). With the exception of INIT/, all others inputs (SL0/ - SL3/) are cyclic being scanned by the single board computer.
The enable signal SL3/ is enabled once every 250 microseconds for a period of 125 microseconds providing the steady scanning of the display and touch panel. (Each row signal is energized for 125 microseconds every 2 milliseconds).
In this way commands are detected as soon as requested and the various displays and leds are driven at high intensity whilst avoiding over dissipation.
Three open collector 6 element non-inverting buffer circuits U10, U11 and U12 (74LS07), are used to

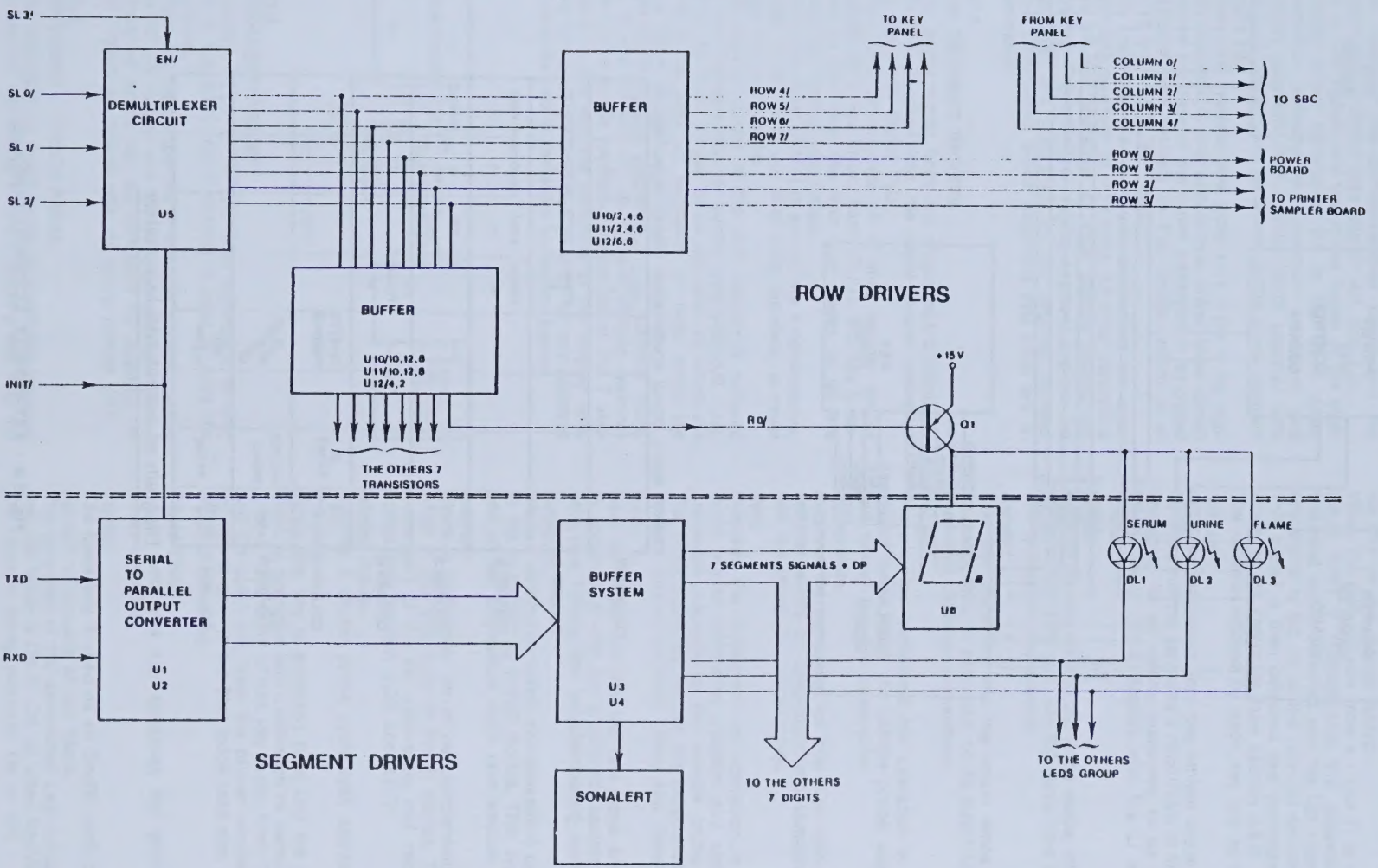


Fig. 5 a - DISPLAY BLOCK DIAGRAM

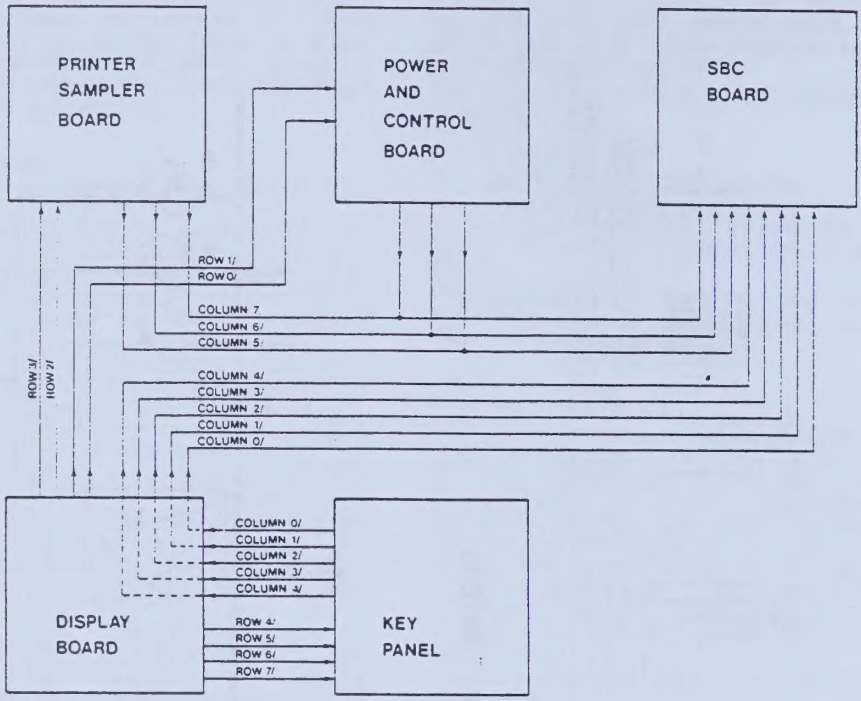


| | ROW0/ | ROW1/ | ROW2/ | ROW3/ | ROW4/ | ROW5/ | ROW6/ | ROW7/ |
|---|---|---|---|---|---|---|---|---|
| COLUMN 0/ | | | | | LITHIUM K | PREDIL K | TEST K | PRIME K |
| COLUMN 1/ | | | | | URINE K | AUTO K | AUTOZERO K | PRINTER K |
| COLUMN 2/ | | | | | SERUM K | STAT K | AUTOCALP K | FEED K |
| COLUMN 3/ | | | | | | TS K | | SAMPLE K |
| COLUMN 4/ | | | | | FLAME K | | | |
| COLUMN 5/ | GAS | B PROBE | | CUVETTE PRESENCE | | | | |
| COLUMN 6/ | AIR | DILUTOR RISING | | PLATE POSITIONED | | | | |
| COLUMN 7/ | FLAME ON | A PROBE | | DOT ALARM | | | | |

Diagram of sensor and key matrix

Fig. 5 b - KEY-SENSOR SCANNING DIAGRAM

provide the parallel buffers required for the rows. Rows 4/, 5/, 6/ and 7/ are used for the touch panel (see section 4.5.4) whilst rows 0/, 1/, 2/ and 3/ are used on the printer/sampler board and the power supply board (see section 4.4. and 4.2).
All 8 row signals are fed to the bases of the eight display driver transistors Q1 to Q8. Each driver transistor activates the common anode of one display segment (half a MAN 6610) together with up to 3 display Leds as shown in the block diagram figure 5A.
When the selected row goes to a « low » the resistor network in the appropriate driver base circuit causes the base of the driver transistor to be pulled negative with respect to the emitter which is at + 15 V (+ 15 V dgt supply).
The transistor then conducts connecting the common display anode to +15 Volts. All other transistors are off and, therefore all other display anodes are floating. The individual display segment and the led cathodes are controlled by the segment drivers, thus determining which segments and Leds are illuminated.

4.5.2
## THE SEGMENT DRIVERS

The serial signal from the single board computer (RxD) is clocked into the serial-parallel converter by the clock signal TxD.
The converter consists of 12 shift register stages contained in two chips. Each IC (U1, U2) has 8 stages so that only the first four stages of U2 are used for storing information.
The initial reset (INIT/) is applied via a non-inverting buffer (U12/10) to pin 9 of both registers, to reset both register blocks.
The parallel output of the shift register is buffered in two 7 stage transistor buffers type U203 (U3 - U4). Only the first 5 stages of U4 are used, of which the first 4 are used for segments, or leds, whilst the last stage is used to drive the sonalert.
The U203 outputs (segment A - G, Decimal point, $\alpha$, $\beta$ and $\gamma$) are fed via current limiting resistors R9 - R19 to the individual segments of the 7 segment display and the cathodes of the display leds. The complete driver circuit (Matrix) for one segment or display Led is therefore as shown below.

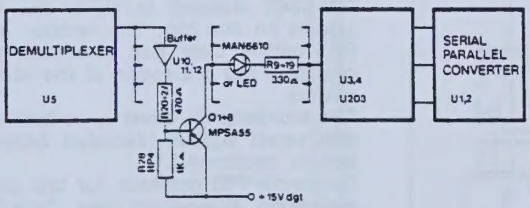


4.5.3
## SONALERT CIRCUIT

The fifth output of U4 (the most significant, or first, bit in the S.B.C. serial output) is used to drive the sonalert.
When this output (pin 12) is low then current passes via R8 (22 Kohm) and the sonalert sounds. The intensity of sound can be increased by inserting R7 (22 Kohm) in parallel with R8 using jumper JR1.

4.5.4
## KEYBOARD / TOUCH PANEL

The keyboard, or touch panel, is physically mounted in front of the display board in such a way that the 7 segments display and the various Leds are visible through the panel.
All connections to and from the keyboard are made via P14 on the display board.
When the relevant row (row 4 - row 7) is energized (once every 2 milliseconds) the presence or an activated key is detected and the 125 microseconds row signal is fed on to the relevant column line.
This signal is then detected and processed by the single board computer (see section 4.6.6).
The actions initiated by each key are as follows.

**Lithium:**
Sets the instrument into the lithium mode allowing for calibration at zero and 1 mmol/litre of lithium and arranging for all values measured to be displayed in the lower (K/Li) display with the Li led illuminated.

**Urine:**
Sets the instrument into the Urine mode, allowing for calibration at zero and 100/100 mmol/litre of sodium and potassium respectively.

**Serum:**
Sets the instrument into the serum mode, allowing for calibration at zero and 140/5 mmol/litre of sodium and potasium respectively.

**Predil:**
Prepares the instrument for operation in the prediluted mode where the sample probe, autosampler and mixing cup are inoperative.

**Autosample:**
Prepares the instrument for operation with the Autosampler where all calibration and sampling is carried out using the autosampler.

**Stat:**
Prepares the instrument for operation in the stat mode, where calibrating solution and samples are presented manually to the sample probe.
The three operating modes are independent of the analysis modes (Lithium, Urine and Serum).

**Test:**
Sets the instrument into the test mode and is used in conjunction with the prediluted, sample and « t » keys (see Testing and troubleshooting section 5.4.0).

**Autozero:**
Starts a zeroing (or offset compensation) cycle when in the Auto/Stat or Predil modes. This cycle forms part of Set Calibration cycle (see section 3.2.6).

**Autocal:**
Starts a calibration (or slope compensation) cycle when in the Stat, Auto or Predil modes. This cycle forms part of the set calibration and recalibration cycles (see section 3.2.6 and 3.2.7).

**Dilutor Prime:**
Initiates a dilutor prime cycle (see section 3.2.11).

**Printer:**
When this key is activated (Led On) the printer, if fitted, is operative and calibration or sample data is printed. Operation of this key twice, from On to Off, and On again will reset the printer sample number counter to zero in the Stat mode (see also Section 8 RS232C interface).

**Paper Feed:**
Paper feed, this key advances the printer paper when activated.

**Flame:**
The flame key is used as an On-Off push button for ignition or dousing of the flame.
The condition of the associated Led indicates whether the flame is On or Off, or when flashing wheter the flame is being switched On or Off.

4.6.0

## SINGLE BOARD COMPUTER DESCRIPTION

Refer to block Diagram Figure 6 and Circuit Diagrams 24 and 25.
The single board Computer may be divided into various sub-sections:

a) the C.P.U. itself with oscillator circuit
b) the address and data bus
c) the memory bank
d) the input/output circuits
e) the analogue/digital converter
f) the sensor scanning circuit
g) the external interrupts
h) initial reset and software fail circuits
j) options not used at present in the IL 943

4.6.1

### THE CENTRAL PROCESSING UNIT

The heart of the single board computer is the C.P.U. type 8031 (U29).
This chip addresses or sequences all other memories and circuits on the board and contains the master oscillator circuitry with the exception of the crystal itself. The crystal (8.0. MHz) is connected in parallel with a 1 Mohm resistor, between pins 18 and 19 of the 8031.
The four ports (PØ - P3) are used as follows:
PØ (Ø - 7)
Least significant digits of address plus Data Bus (Output/Input)
P2 (Ø - 7)
Most significant digits of address bus (Output)
P1 (Ø - 7)
Sensor signals from keyboard, Printer Sampler board and Power Supply Board (Col Ø/ - Col 7/) (Input)
P3 (Ø - 7)
Various individual input and output signals.

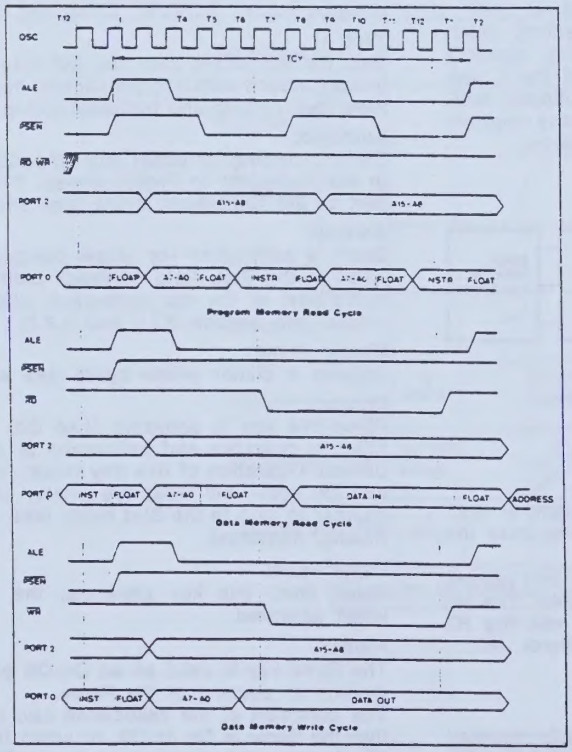


Fig. 6 a - TIMING DIAGRAM 8031

Figure 6a shows the basic timing diagram of the microprocessor for the program memory read cycle and the data memory read and write cycles. As can be seen the minimum instruction cycle time TC is twelve oscillator periods.
The signal ALE which is present at all times when the oscillator is running and provided there is no reset, has a frequency of one sixth of the master oscillator and is used for latching the least significant digits of the address bus (PØ).
The signal PSEN/ is used to synchronize the data bus inputs during fetch, or reading, of the external memory.
Read (RD/, P2C.37) and write (WR/, P2C.39), are used to synchronize the reading and writing from and to the external memory.

4.6.2

### ADDRESS AND DATA BUS

The 8031 is capable of addressing:

— 64 K bytes of program memory
— 64 K bytes of external data memory
— 256 bytes of internal data memory and special function registers.

The least significant digits of the address bus AØ to A7 are common with the Data Bus DØ to D7 so that the address digits are latched in U24 (74LS 373) by the signal ALE.
Digits A8 - A12 of the address are used in the addressing of the individual memory chips whilst A13 - A15 are used for chip selection.
The group of address digits A8 - A15 does not need to be latched and an undirectional buffer, U23 (74LS 245) is used.
The IL 943 does not use all available addresses or memory capability, the actual configuration is:

— 64 K bytes of Eprom type 2732 (U3, U6, U1 and U16)
— 1 K bytes of Ram type 4118A (U2).

The selection of the required address patterns is achieved by factory presetting the positions of a series of jumpers connected to each memory chip. In particular:
JR1 is in position BC because the first 4K bytes of memory are not internal to the central processing unit U29.
Since the Data Bus is used both inside and outside the single board computer, a bidirectional driver U32 (74LS245) is used to buffer the input and output signals on this bus. The resistor networks RP4 and RP5 on the Data Bus connector provide for noise rejection and protection of the various circuits connected.
The bidirectional driver is controlled by the address and select signals (decoded addresses) as described in section 4.6.4.
Connector P50 provides, for test purposes or further expansion, all address lines, Data Bus lines and the signals RD/ and WR/.
Connector P51 provides, for the same reason, the chip select signals.

4.6.3

### THE MEMORY BANK

The memory bank provides for 8, 28 pin packages for read only or read/write memory chips.
The standard JEDEC pin compatibility allows for the fitting of 24 or 28 pin chips.
As described in section 2 a series of jumpers are factory presetted for the particular configuration of memory chip used.
When 24 pin chips are fitted in 28 pin, position Pin 1 of the chip corresponds to Pin 3 of the socket and so on.

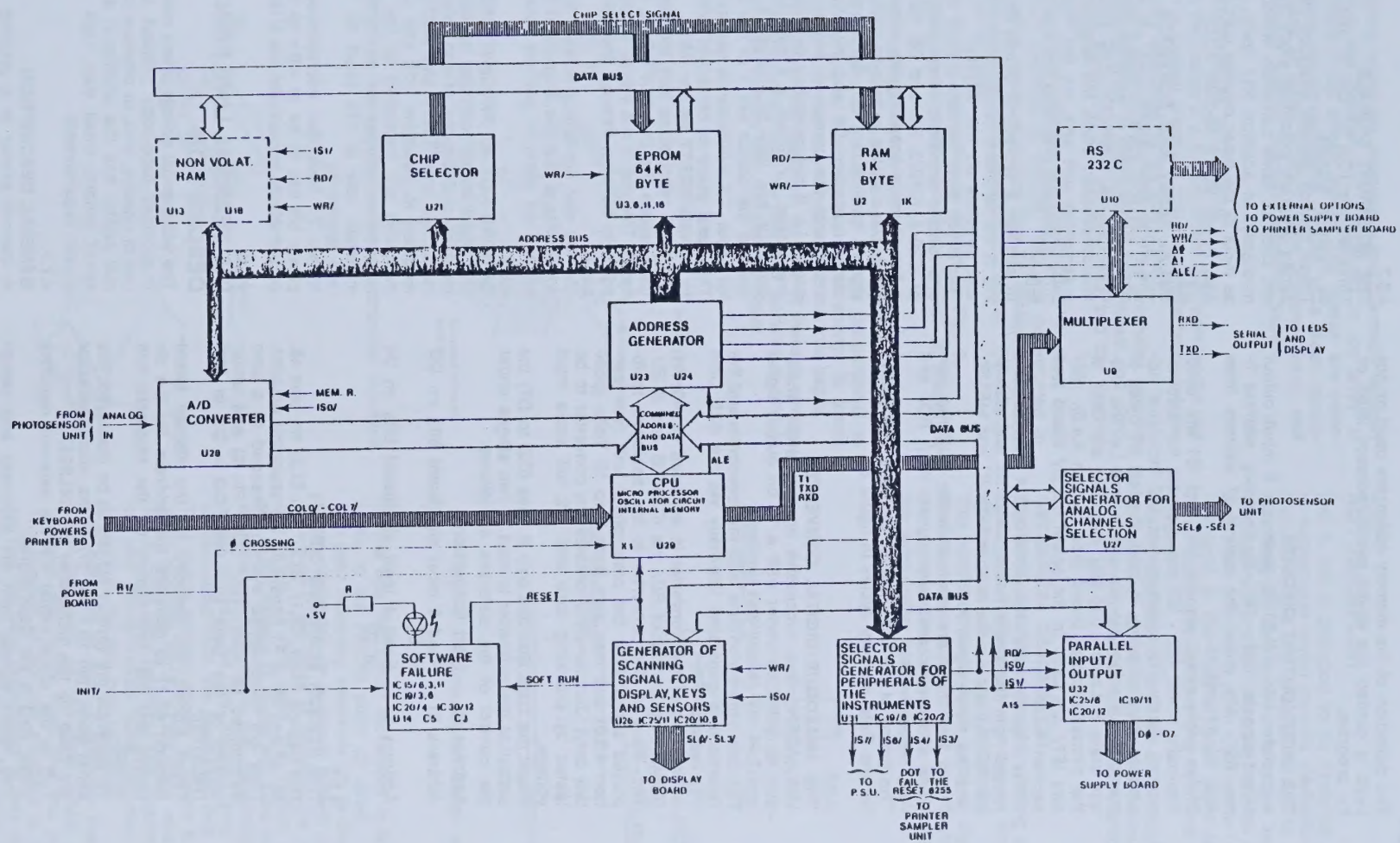


Fig. 6 - SBC BLOCK DIAGRAM

The definition of the memory addresses used or not used is carried out in the microprocessor itself or by program.

4.6.4
**THE INPUT/OUTPUT CIRCUITS**
A decoder U31 (74LS138) generates 8 input/output select signals (ISØ - IS7) by decoding address lines A9 - A11 under the control of address lines A12, 13, 14 and 15.
Of the eight select signals, ISØ and IS1 are used internally whilst IS2 - IS7 are available for external control. Each I/O select covers 512 individual addresses thus covering, in total, the last 4K bytes of memory. All select signals are inverse i.e. the unique state is Logic « 0 ». IS3/ and IS4/ are used in the printer/sampler board (see section 4.4.0). IS6/ and IS7/ are used in the power supply board (see section 4.2.0).
Other signals used for input/output devices and routed from the single board computer are addresses AØ, A1 and A2, the strobes MEMW/ and MEMR/ and the clock signal ALE/.
These last three are open collector buffered versions of the microprocessor signals WR/, RD/ and ALE respectively.
The timing of the input/output cycles is that shown for the Data memory cycles in figure 6a.

4.6.5
**THE ANALOGUE/DIGITAL CONVERTER**
U28 (AD574) is a successive approximation analogue to digital converter with a 12 bit output signal and 2.44 mV resolution.
The total conversion time is 35 microseconds and the reference is generated internally via the 49.9 Ohm 1% resistor R7.
Addressing of the converter is achieved by A0, A1, MEMR (the inverse of RD/ via IC20/12) and IS∅/.
The input of the converter is the analogue multiplexed signal from the preamplifier unit (see section 4.3.6) and may vary from 0 to 10 Volts (positive only). Jumper JR13 enables the converter to be tested by providing zero and 1/2 full scale input voltage.
Since tha Data Bus has only 8 lines (DØ to D7) the output of the converter is read in two stages under the control of the adresses as follows:

Address 00 - Start Conversion

Address 01 - Read 8 most significant bits on DØ to D7

Address 11 - Read 4 least significant bits on D4 to D7

4.6.6
**THE SENSOR SCANNING CIRCUIT**
The outputs SLØ/, SL1/, SL2/ and SL3/ on pins 45, 46, 48 and 49 of P1 constitute the scanning counter. They are incremented every millisecond at a time determined by ISØ/, WR/ (IC20 Pin 8) and under control of the Data Bus lines DØ - D3 in U26 (74LS175).
These signals are decoded on the display board (section 4.5.1) to generate the address for the displays and the Row signals for the keyboard and sensor.
To generate the various signals to be displayed, the serial ports (pin 10 - pin 11) of the microprocessor are used via the multiplexer U9 (74LS257).
TxD is the clock signal for the external registers while, RxD is the Data Signal.
The return signals from the keyboard and sensor (Col Ø/ - Col 7/) are read directly into port 1 of the microprocessor.

4.6.7
**THE INTERRUPT SIGNALS**
Three signals (Col 5/, Col 6/ and Col 7/) are used as interrupt signals.
These column signals interrupt the microprocessor during program execution since they represent states, such as flame condition, which need action immediately. In addition R1/ (zero crossing) is used as input to the timer counter port of the C.P.U. (see also Power Board section 4.2.0).

4.6.8
**INITIAL RESET AND SOFTWARE FAIL CIRCUITS**
The initial reset signal INIT/ is generated by the power supply board and passes into the single board computer via connector P1C pin 21 to reset the microprocessor, block the scanning circuits for the preamplifier unit and, via the reset line, to switch off the displays and zero the analogue channels selector.
In addition a protection circuit detects malfunctioning of the software which resets the microprocessor and switches off the display.
This circuit takes the output SLØ/ from U26 (74LS175) and feeds it into the differentiating circuit composed of IC20/4, IC19/3, R6, and C5. As long as the computer requests scanning the differentiated negative going pulse at the output of IC30/12 (differentiated signals from SLØ/) will discharge the timer (555) charge capacitor C3 and the signal on pin 2 will not reach the threshold value. Should scanning cease, i.e. if approximately two differentiated pulses are missed, or about a 4 milliseconds period, the capacitor has time to charge to the threshold value and the output pin 3 of the 555 goes negative for about 1,1 milliseconds generating a reset pulse. This reset pulse is combined with the INIT/ signal to provide RESET as for INIT/.
The same reset pulse sets the flip flop (IC15) which then causes the Led SOFT FAIL (DL1) to be illuminated. This led is not visible to user although it can normally be seen through the ventilator on the rear panel.
The led and flip flop are reset by the INIT/ signal which means that the instrument has to be switched off and on again to achieve resetting.

4.6.9
**OPTIONS NOT AT PRESENT USED ON THE IL 943**
The single board computer contains facilities for the insertion of 256 bytes of non volatile memory in two ram chips type X2212 and X2210 which are to be mounted in positions U13 and U18. If fitted these memories are controlled by the program software. In addition facilities for an RS232C interface at a minimum rate of 110 baud on P52, are provided (see section 8).
Signal T1 from the microprocessor to the multiplexer U9 has to be at « 0 » to enable the RS232C output which is provided via U10 to connector P40.

4.7.0
## 943 THERMAL LINE PRINTER DESCRIPTION

The 943 thermal printer offers many distinct benefits. It provides hard-copy printout silently without the use of ribbons, inks, or odorous chemicals. The thermal printer has the additional advantages of high-speed output, small size, high reliability, and low power requirements.

4.7.1
**GENERAL DESCRIPTION**
A thermal printer is a printing device which use thermal energy rather than impact energy. Each thermal printer consists of a matrix of heating ele-

ments, which are electrically and thermally Isolated from one another and configured in an array of single-crystal silicon mesas. The mesas are selectively electro-resistance heated to a peak temperature of 200°C to 260°C, and produce sharp, well defined dots on thermally sensitive paper.

4.7.2
**MECHANICAL INTERFACE**

In the design of a system which incorporates the use of a thermal printhead there are three basic mechanical interfaces to be considered.
These interfaces are between the printhead and the holding plate or heatsink, the printhead and electrical connector, and the printhead and the thermal paper.
The line printheads are constructed to allow maximum flexibility of design. They are constructed in such a maner, that they may be pressure mated to the heatsink and electrical connector without the use of solder.
A typical application is shown in Fig. 7.
Detail of the actual pressure contact is shown in Fig. 7a.
The mating of the printheads and the thermal paper is a design consideration of major importance, since the quality of the print is directly proportional to the efficiency with which thermal energy is transferred from the printheads to the thermal paper.
To achieve the maximum transfer of thermal energy, the printheads must be mounted parallel to and in intimate contact with the thermal paper.

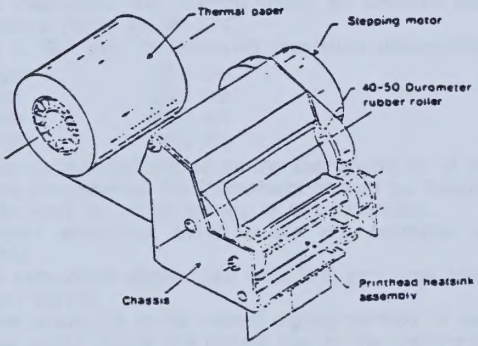


Fig. 7 - Thermal printer head mechanical interface.

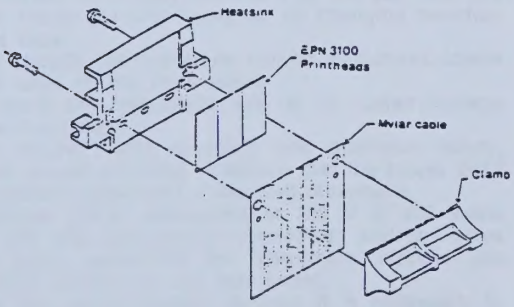


Fig. 7a - Thermal printer head pressure contact detail.

4.8.0
## AUTOSAMPLER

The IL 943 is designed to be operated with a built in autosampler which permits the calibration of the instrument and the analysis of up to 32 samples following the activation of a single key.
The calibration cups (cuvettes) are so arranged as to provide a Set or 2 point Calibration (Autocal plus Autozero) at the start of each plate and an additional calibration between the 16th and 17th sample cuvettes.
The Autosampler is fitted as an integral part of the fluidic panel at the front of the instrument.
The following description makes reference to drawings 2 and 22.

4.8.1
**MECHANICAL DESCRIPTION**

The autosampler consists of a rotating plate support connected mechanically by a gear system to the spindle of the motor (p/n 95045-01).
This motor is driven by a 25,5 Volt ac signal obtained from the power supply board (see section 4.2.5) via the sampler interconnection board mounted into the autosampler assy.

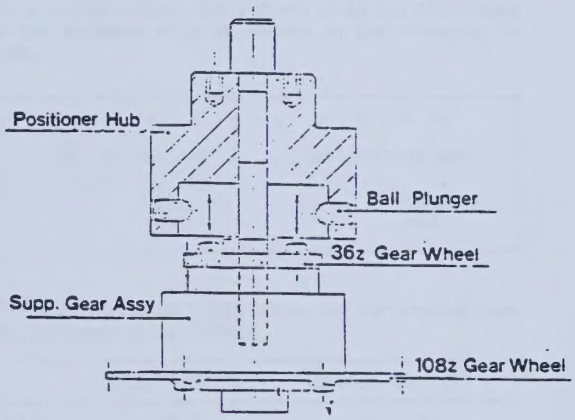


Fig. 8 - Autosampler clutch system.

In this way the motor movement is transmitted directly to the cuvette plate (3) itself.
The gear mounting assembly (2) is divided into two gears connected by a clutch system in such a way that even if the plate is blocked the motor spindle can rotate. In this case the friction clutch allows the motor spindle to rotate but if the torque reaches a predetermined value the transmission from the motor splindle via the support gear assembly is disconnected from the positioner hub.
This clutch system, shown in figure 8, contains various separate parts. A 36z gear wheel is fixed to the support gear assembly and meshing is achieved by two spring-loaded balls mounted on pressure springs in the two ball plungers.
The balls are of such a diameter that they fit between the teeth of the gear wheel and the ball plungers are rigidly fixed into the positioner hub. The position of the ball plungers is factory preset so that the balls themselves fit into the gear wheel with just enough pressure to allow the clutch to work efficiently. That is, to allow the operator to position the plate or free the motor in case of

blockage whilst at the same time providing a positive drive action.
Immediately below the cuvette plate (3) is the positioning disc (15) which is fitted by two screws which pass through elongated holes in the disc and screw into the positioner hub. The elongated holes permit centering of cuvette to the presence sensor (6) and the sample probe.

4.8.2
**OPTICAL SENSORS**

The movement of the autosampler is controlled by two optical sensors. Fitted to the autosampler motor drive shaft is a black plastic disc with 4 holes at right-angles to each otner. The light passes from the transmitter to receiver of the optical sensor when one of the holes is positioned exactly between them.
Because of the reduction gears (1:36) the rotation of the motor from 1 hole to the next is exactly that required to move from 1 cuvette to the next in the cuvette plate.

The positioning of a hole directly between the transmitter and receiver is achieved by the co... so that the only adjustment necessary is tha... positioning disc described in 4.8.1.
The holes are not coded in any other ma... sc that the computer merely counts holes from the « Start » position of the plate in order to identify the number of the cuvette or Set Cal and Cal actions.
The second optical control in the autosampler is the cuvette (or cup) presence detector (6) which detects the presence, or absence, of a cuvette (see also Printer/Sampler board description section 4.4.3) This detector is positioned so that, as the sample plate rotates, each cup passes between the infrared transmitter and receiver.
The circuit controlling this detector is described, in detail, in the above mentioned section.
All electrical connections between the autosampler and the rest of the instrument pass via the sample interconnection board from which a flat cable (J23 connects the signals to the Printer/Sampler board

# SECTION FIVE

# INSTALLATION, PERFORMANCE TESTS AND CHECK OUT

5.1.0

## INSTALLATION

This section provides information on unpacking and inspecting the instrument, details the required services, and provides a step-by-step procedure for setting up the instrument and prepairing it for operation.

5.1.1

**WORKING AREA**

Maintain the surroundings for the IL 943 free from all dirt, corrosive fumes, vibration and extensive changes in temperature.
The instrument will operate within an ambient temperature range of 18°-35°C.
The IL 943 has the following maximum dimensions:

| | |
|---|---|
| Height | 56,0 cm |
| Width | 39,0 cm |
| Depth | 66,0 cm |
| Weight | 45,0 Kg |

Since heat is developed during the operation of the flame photometer, the instrument should be located in an area in which the air is not restricted.
Special extraction systems are not normally required.
The instrument should rest on a firm and level laboratory bench.
If the analyst is to be seated during periods of use, knee space below the centre line of the instrument is desirable.

5.1.2

**ELECTRICAL REQUIREMENTS**

Typically compatible with 220 volt (± 15%) 50 Hz grounded AC power, 100, 110, 115, 125, 220, 230, 240 Volt inputs are also available, by changing transformer taps.
For specific information on a given instrument, check the label on the back panel.
Operate the instrument only at its stated voltage and frequency.
To ensure stable operation and maximum safety, care should be taken to ensure that the power cord is properly grounded at the wall receptacle.
Nominal power dissipation at 220 V is 300 watts (1 KW with compressor connected) and the sizes of fuses protecting the instrument circuits are clearly labelled on the rear panel.
For the various supply voltages it is necessary to check or modify the connections to the instrument trasformer terminal strip.
To obtain access, the cover panel of the instrument must be dismounted by removing the cover chimney (p/n 67844) and extracting the four fixing screws.
Referring to diagram 13 identify the brown wire (sleeve N° 1) and the blue wire (sleeve N° 4).
For a supply voltage 220 V these wires are connected to the terminal strip as shown in the following figure.

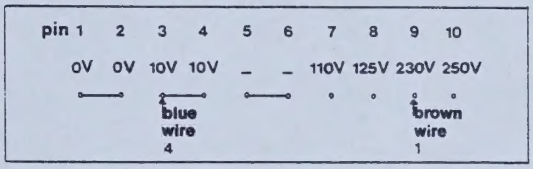


The connection of these wires for the various supply voltages is as follows:

| | blue wire (4) | brown wire (1) |
|---|---|---|
| 100 V | pin 3 | pin 7 |
| 110 V | » 1 | » 7 |
| 115 V | » 3 | » 8 |
| 125 V | » 1 | » 8 |
| 220 V | » 3 | » 9 |
| 230 V | » 1 | » 9 |
| 240 V | » 3 | » 10 |
| 250 V | » 1 | » 10 |

A power outlet is provided on the rear panel of the IL 943 which supplies mains voltage, via the main instrument power switch and a protecting fuse, for the auxiliary compressor.
A plug compatible with this outlet is supplied in the accessory kit.

5.1.3

**AIR REQUIREMENTS**

**Compressed Air**

Operation of the IL 943 requires air supplied at a minimum supply pressure in the range **between 1,7 atm (25 psi) and 4,0 atm (58 psi) and with a minimum volume flow rate of 15 l/min.**
The air must be clean and free from moisture and oil.

**Manifold Air**

If a laboratory compressed air line exists with adequate capacity, then it should be used, together with adequate filters to remove oil and moisture.

**Air compressor**
For those laboratories without an edequate source of compressed air, IL can supply a suitable air compressor (p/n 67232) to operate the II 943.
The compressor may be plugged into the back of the instrument and is controlled by the flame On key.
Further details of the compressor, its use and maintenance are available from your IL subsidiary or agent.

5.1.4
**PROPANE FUEL**
The propane fuel for the IL 943 Flame photometer should be at least 99% pure with a dew point of less than — 23°C at one atmosphere, and must contain less than 50 ppm sulphur.
Suitable « instrument grade » propane is available from IL in twelve unit cases (57000-12) of 0,45 Kg cylinders.
The instrument is fitted with a valve to accept these cylinders which may be housed in a receptacle (p/n 82322) on the back panel and provide fuel for typically ten hours continuous operation.
Typical full cylinder pressure at room temperature is 110 p.s.i. (8 atm).
The cylinder should be replaced when the pressure falls below 36 p.s.i. (2,5 atm) but since propane is a liquid at room temperature under these pressures, the cylinder pressure will not fall until the liquid phase has been exhausted.
Commercial grade propane should not be substituted for instrument grade fuel.
Commercial grade propane contains significant concentrations of higher boiling hydrocarbons and sulphur impurities which alter the flame temperature and deposit in the plumbing system and on the burner.
The use of propane fuel less than 99% pure will violate the warranty on plumbing and burner components of this instrument.
If local fire regulation permit, larger cylinders of instrument grade propane may be used.
DO NOT store unused propane cylinders at temperatures above 55°C.
When empty DO NOT discard cylinders in fire.

5.1.5
**INSTALLATION**
**Install glass chimney, chimney cover and flame cover**
Remove the glass chimney (22102) from its protective packing and ensure that its windows are clean. Locate the two clear windows on the chimney.
The chimney is positioned in the flame housing with the windows at the bottom and oriented so that the longer window is positioned towards the left of the instrument pointing to the centre of the optical filters for the four elements to be measured.
In this position the smaller window will be aligned with the ignition detector photocell to the front of the flame housing.
Press the glass chimney down firmly and carefully until it fits security over the black silicone rubber gasket around the burner/ignition block assembly (see Fig. 1).
Place the gauze screen chimney cover (22104) over the top of the chimney, and the flame housing cover (67844) on the flame housing, aligning the slot in the base of the cover with the pin on the top left centre of the housing and ensuring that the door is closed.

**Attach compressed air hose**
Locate the air line connection on the air filter mounted on the instrument rear panel, wind a piece of PTFE plumbing tape around the connection thread and screw on the air hose (65598).
The opposite end of the air hose should be attached to the air filter of the manifold or compressor supply.
If the compressor is used, plug this into the compressor power receptacle at the rear of the instrument.

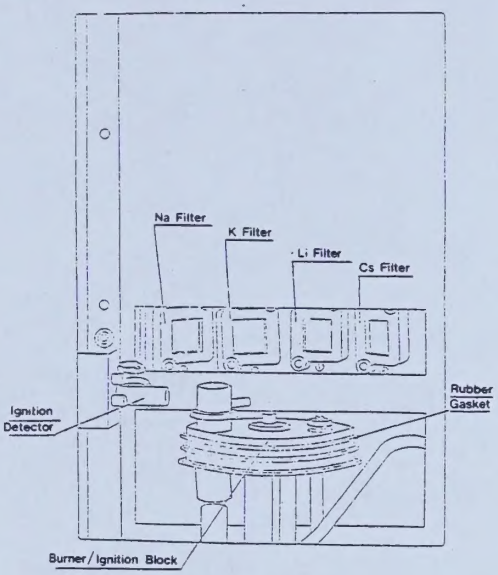


Fig. 1 - Flame Housing

**Attach propane fuel cylinder**
Locate the fuel supply hose and shut-off valve on the back panel, and close the shut-off valve finger tight (do not overtighten this valve) to prevent liquid propane from entering the instrument while installing a cylinder.
Thread a propane fuel cylinder (57000) onto the shut-off valve, taking care to prevent cross-threading.
Cross-threaded valves may leak if forced, or fail to seal and not open.
The propane fuel cylinder is fitted with a white plastic protective cap (which should be removed to reveal the fitting threads) and a Schraeder valve which prevents propane leaving the cylinder until the instrument shut-off valve is firmly attached.
Mount the propane cylinder in the cup provided on the rear panel of the instrument.

**Waste Tube**
Connect the PVC waste tube (99095-01) to the waste receptacle outlet (see Fig. 1a).
Lead the tube's free end to a suitable waste collection vessel, which must be located below the instrument's working surface.

**Connect Electrically**
Unless otherwise indicated on the nameplate on the rear panel, plug the IL 943 flame photometer into a 220 Volt, 50 Hz Ac grounded wall receptacle (for different voltage sources see section 5.1.2.)

**Install Cs Diluent Bottle**
Open the instrument's front door and locate the Cs bottle receptacle on the left hand side.
Take one 500 ml Cs diluent bottle (97564), insert Cs aspirator, tighten the cap and place the bottle so

that the front of the label faces outwards. Close the door.

**Probe and tip adjustment**

Both the steel sample probe and the sample aspiration tip are to be fitted in their mountings at a correct height; **this is essential in order to obtain good analytical results.**

The following step-by-step procedure details the operations necessary to obtain a correct probe adjustment:

- open the instrument door,
- connect the loose end of the dilutor sample chamber tube to the sample probe,
- locate the sample probe clamp on the sample probe wheel,
- loosen the red knob sufficiently to let the sample probe slide down through the clamp,
- tighten the knob so that the probe shoulder (thicker portion) does not protrude from underneath the clamp,
- turn instrument on and allow the automatic prime cycle to go to completion,
- carry out three priming cycles (« PRIME » key),
- press the « PREDILUTED » key and then « TEST » key.
  Once the automatic lamp test is over (4 seconds) press « Autocal ».
  This will cause the sample probe to move to the spin cup and the dilutor to dispense 2 ml of diluent into the cup,
- release the clamp and slide the sample probe down into the spin cup so that its tip is approximately 1 mm below the diluent surface.
  Screw back the clamp firmly,
- similarly adjust the sample aspirator so that its teflon tip is approximately 3 mm above the spin cup bottom,
- press the « Autocal » key again.

**Printer Paper Loading (for Printer and/or Printer Sampler Versions)**

With the instrument on and printer on:

- locate and open the printer door on the top left corner of the instrument's front panel,
- lower the metal flap,
- unroll a leader approximately 25 cm. long from the paper roll. Holding the paper roll with your left hand, guide the leader down into the printer housing,
- keep the « Paper Feed » key depressed and at the same time push down the excess leader in your left hand until the paper engages the printer advance mechanism (Fig. 1b),
- place the roll in its housing (no supporting pin needed),
- close the flap and the door,
- advance the paper until this is visible through the window.

**Note:**

If the laboratory location is such that the average barometric pressure is 660 mmHg or less (i.e. the laboratory is at an altitude of some 1000 meters or more) or if the average temperature and humidity are significantly different from 25 °C 65% RH, it is recommended that the set up procedure of paragraph 5.2 be carried out.

5.2.0

## SET-UP PROCEDURES

The following procedures are designed for use in field or at dealers premises and relate to those actions necessary following an in-field repair of the Fluidic/Plumbing assembly or the preamplifier sub-unit.

5.2.1

**ASPIRATION RATE** (Also available to Client)

**Note 1**

For this test any solution containing 1.5 mmol./litre $Cs^+$ may be used. A suitable on-hand solution is the Cs diluent supplied with the instrument.

**Note 2**

If the Flame setting has been disturbed, or the preamplifier sub-unit repaired, it may be necessary to control the Flame or preamplifier outputs (see procedure 2 and 3).

**Note 3**

Do not adjust the aspiration rate unless you are certain that there are no obstructions in the aspiration path,

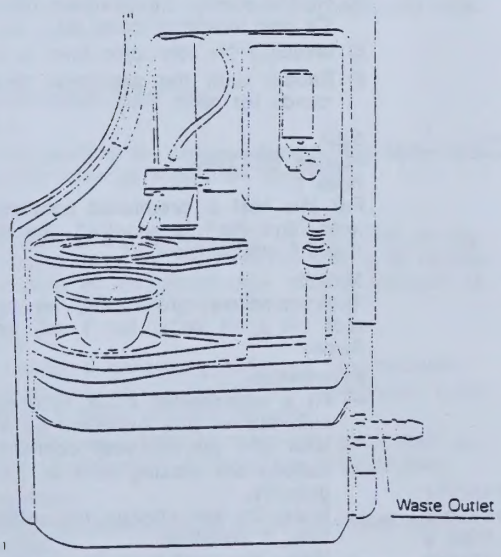


Fig. 1 a - Spinning Cup and Drain Collector

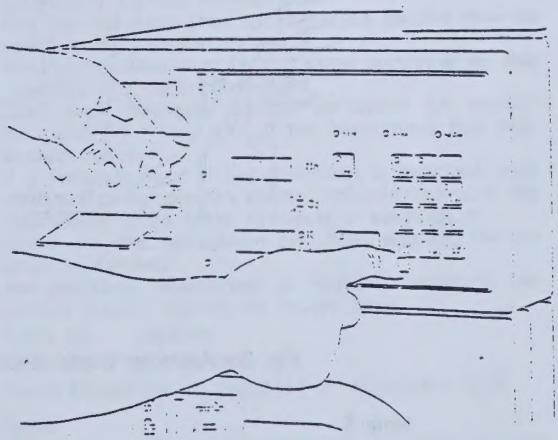

Fig. 1 b - Printer Paper Loading

**Note 4**

Before switching on the flame, check that the drain tube at the base of the atomizer is full of liquid.
If this is not the case carry out the tube filling procedure as follows:

1. Pinch the botton of the drain tube below the atomizer and ignite the flame. Keep the tube blocked until sufficient liquid has collected to block the tube automatically.
2. Carry out a sequence of 5 or 6 dilutor primes until the whole of the drain tube and the U-tube (plexiglass block) are full of liquid.
3. By means of the two screws on the rear of the fluidic panel which hold the U-tube in position, adjust the height of the liquid in the drain tube such that the level is about half way up the vertical part of the atomizer drain (see figure 2).
   If the liquid level is too high, the non-atomized waste can cause contamination and therefore erroneus reading of lack of repeatability.
   Allow at least 30 minutes after flame ignition before performing tests.
   **During this period, with the aspiration tip in prediluted position, it is advisable to aspirate a beaker (abt. 25 ml) with CONTRAD 2000 diluted 1 : 50 with Cs diluent.**
   **It is also suggested the aspiration of some serum diluted 1 : 10 with Cs diluent.**
   Replace tygon tip in mixing cup position and leave the instrument in STAT mode.

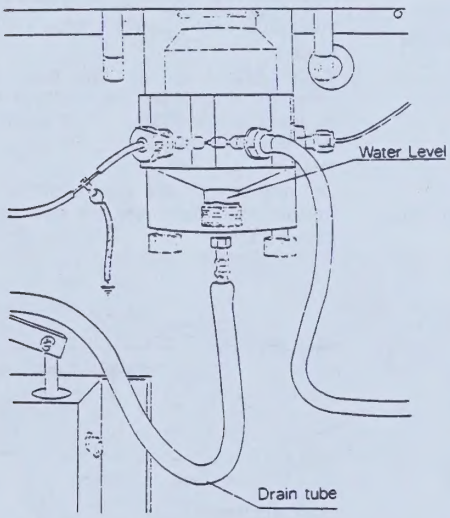


Fig. 2 - Atomizer waste level.

**Note 5**

If the atomizer chamber has been dismantled and/or cleaned, it is advisable to aspirate a prediluted (1 : 50) CONTRAD 2000 solution firstly and then a prediluted (1 : 10) serum solution before carrying out aspiration tests.

**Preparation and test**

— Place the aspiration tip in the prediluted position holder checking that the tip (p/n 65183-10) is in good condition.
— Select Serum, Prediluted on the keyboard and activate test.
— After lamp test the display will go off and (assuming no solution is being aspirated) the Cs low indicator will be On and the Led « Test » flashing.
— Using a calibrated pipette place 1 ml of Cs solution in an appropriate beaker.
— Offer the solution in the beaker to the aspiration tip (the tip should reach but not press against the bottom of the beaker).
— The Sodium (Na) display will now start to count (this is done by recognizing the $Cs^-$ content in the flame) until the beaker has been emptied.
— The time shown on the display is the aspiration time for 1 ml and is to be regulated for 40 ± 2 seconds.

**Note:** Counting does not start or finish immediately due to the fluidic delay between aspiration tip and flame.

**Adjustment of aspiration time**

If the aspiration time is merely being checked and no obstructions to the aspiration path are evident, the aspiration time measured above may be reduced by turning the injection tip microscrew on the atomizer body in a clockwise direction. Anticlockwise increases the aspiration time.
If movement of the screw produces the inverse effect, i.e. clockwise rotation increases the aspiration time then the injection tip is incorrectly positioned and the procedure for « first setting » of aspiration time should be followed.

**First setting of aspiration time**

(To be used if the injection tip assembly has been removed or the incorrect setting as mentioned in 5.2.1 has been noted).

1) Rotate the injection tip microscrew fully anticlockwise.
2) Set the instrument in Prediluted Test with the aspiration tip in the Prediluted holder.
3) Place a beaker (ca. 25 ml) under the aspiration tip.
4) Rotate **slowly** the injection microscrew until the Cs low indicator goes off.
5) Measure the aspiration time as indicated in 5.2.1.
6) Repeat until the aspiration time is 40 ± 2 seconds for ml.

5.2.2

**FLAME SETTING**

**Note 1**

For this test a prediluted solution (1 : 100) of 140 mmol/litre $Na^+$ is required, the diluent must contain 1,5 mmol/litre $Cs^+$.

**Note 2**

The aspiration rate should be approximately correct (40 ± 10 secs. for 1 ml) before setting the flame.

**Preparation**

— Fit a manometer (FSD 1000 g/cm²) in parallel with the air line between the air pressure regulator and the atomizer chamber.
— Loosen the locking nuts in the Air and Gas regulators.
  **Note:** Do not change the setting of the regulators, if possible.
— Place the aspiration tip in the prediluted posltion holder.

— Fill a suitable beaker with 25 ml of prediluted 140 mmol/litre $Na^+$ solution and place under the aspiration tip.
— Switch On the instrument and then the Flame.

**Note:** If the Flame does not ignite check that the air pressure is about 970 gm/cm² and adjust the gas pressure regulator (clockwise increases pressure) until the flame ignites.
CAUTION: avoid excess gas pressure which may cause a very high flame or a minor explosion.

— Leave the instrument on for 30 minutes to allow the system to reach working temperature, topping up the beaker of solution from time to time.
**Note:** The instrument should not be left to run dry for too long a period but continuous aspiration of liquid is not necessary.

**Setting up**

— Activate prediluted, test. After the completion of lamp test make sure that the 25 ml beaker is full of prediluted solution and that the counter in the Na display is counting (confirm aspiration).
— Activate Sample, Dilutor Prime. The Na display will show a value proportional to the $Na^+$ content measured in the flame (nominal values are of the order of 2000).
— Set the air pressure as measured on the manometer to 970 gm/cm² and tighten the lock nut.
— Adjust slowly the Gas pressure regulator until the reading on the display is a maximum.
**Note:** This is best achieved by increasing the gas pressure, rotating the regulator knob clockwise, until the maximum has been passed and then rotating the knob anticlockwise until the maximum is once more noted.
Note the maximum value displayed.
— Reduce the gas pressure (anticlockwise rotation of knob) until the reading on the display is reduced by 1% of the maximum value i.e. a reduction of 20 points on a 2000 point nominal maximum. Tighten the lock nut on the regulator.
— Activate test to exit from the test routine and switch off the flame. Remove the manometer from the air line and replace the normal connection.
— Reignite the flame and after waiting some 10 minutes for warm up, check the aspiration rate. (See section 5.2.1).

5.2.3
**PREAMPLIFIER SETTING**

**Note 1**

Prior to resetting the preamplifier unit the flame and aspiration settings should be checked.

**Note 2**

All values listed apply at 25°C, 50% RH, 760 mmHg. Differences of ± 5°C, ± 10% RH and ± 50 mmHg at location of instrument may require changes in values set. (Consult IL Spa for details).

**Note 3**

The following calibrating solutions are required:

a) 140/5/1 mmol/litre $Na^+/K^+/Li^+$ prediluted 1:100 with 1,5 mmol/litre $Cs^+$ solution.
b) 140/5/0 mmol/litre $Na^+/K^+/Li^+$ prediluted solution 1:100 with 1,5 mmol/litre $Cs^+$ solution.

**Preparation**

a) Place the aspiration tip in the prediluted position holder.
b) Set the instrument in Serum, Prediluted.
c) Remove the left hand cover to obtain access with a DVM to the preamplifier test points.
Cover the instrument left hand side top with cardboard to avoid incident light affecting the readings.
(**Note:** Do not cover chimmey! But use normal metal cap).
d) Switch the instrument On and Flame On.
e) Offer a solution to the aspiration tip and leave the instrument for 30 minutes prior to beginning the setting up.

**Setting up**

The following table shows the test points, trimmers, and solutions to use and values of setting.
Ensure that the solution used is fresh and that there is no short term drift during setting.

| channel | test point | trimmer | solution | Value to be set |
|---|---|---|---|---|
| Cs | TP1 | RV2 | 140/5/1 | —4,23 Volts |
| Na | TP4 | RV10 | 140/5/1 | —2,96 Volts |
| K | TP3 | RV7 | 140/5/1 | —144 mV. |
| Li0 | TP2 | RV3 | 140/5/0 | —150 mV. |
| Li1 | TP2 | RV4 | 140/5/1 | —631 mV. |

**Note:**
The values of Li0 and Li1 are interdipendent and the settings need to be repeated. These values are also subject to noise (± 5 mV abt) which is quite normal and caused by the high gain of the lithium amplifier. The values indicated are therefore intended as mean values.

5.3.0
## PERFORMANCES TESTS

After completion of the setting up procedures described in the previous paragraphs, the instrument is ready for operation.
The following tests will enable the service technician or installation engineer to confirm that the instrument is operating correctly and if desired, within specification as regards precision.

5.3.1
**TESTS IN STAT**

With the instrument in SERUM, STAT, PRINTER mode and using the standard calibrator ampoules, 140/5/1 (p/n 33313-50) perform a SET CAL. (See Operator's Manual Section 4.2).
For the Autozero step either the Cs diluent may be used or no solution at all.
After calibration sample the same ampoule as was used for the calibration itself.
The result displayed should be within 1,0 mmol/l $Na^+$ and 0,1 mmol/l $K^+$ if the instrument has calibrated correctly.
If a measurement of the precision is required then continue to sample the calibration ampoule until the instrument once more requests a calibration.
Carry out this calibration and then analyse the results as follows:
the precision (expressed as Relative Standard Deviation R.S.D.) should be better than:

1,0% for Sodium
1,5% for Potassium

there should be no evidence of significant drift.

**Note:**
these tests may be repeated in the Lithium and Urine modes using the calibrating solutions listed in the operator's manual section 4
**During the test in Stat mode the sample probe must be carefully wiped before and after any aspiration.**

5.3.2
**TESTS USING THE AUTOSAMPLER**

Load the sampler tray as follows:

| | |
|---|---|
| CAL | Ampoule 140/5/1 (p/n 33313-50) |
| Autozero | Distilled Water |
| Cup 1 | Ampoule 140/5/1 (the same are as used for CAL) |
| Cups 2-16 | Pool of aqueous solution, serum or plasma to choice |
| Central CAL | Ampoule 140 /5/1 as for the original CAL |
| Cup 17 | Ampoule 140 /5/1 as for the original CAL |
| Cups 18-32 | Pool of acqueous solution, serum or plasma to choice (NOTE: leave cup positions 20, 25 and 30 without cups). |

Set the instrument in the SERUM, AUTOSAMPLER, PRINTER mode and activate Autocal to set the cycle in operation.
During the measurement of cups 2-16 select STAT, when the instrument is ready for stat measurement select Lithium and using the 140/5/1 and 140/5/0 calibrating ampoules, calibrate the instrument in Lithium and make two measurements of the Lithium 1.0 calibrating solution.
Then return to the Autosampler mode.
At the end of the plate check the printed results for the following characteristics:

1) The calibration controls (cup 1 and 17) should be within 1,0 mmol/l Na and 0,1 mmol/l K.
2) There should be no evidence of significant drift between calibrations.
3) The precision of the pool solution results (expressed as Relative Standard Deviation) should be better than:
   1,0% for $Na^+$
   1,5% for $K^+$
4) There should be no evidence of a significant change in measured value of the pool solutions before and after the STAT intervention.
5) The Lithium stat results should be within the range 1.0 ± 0.03 mmol/l.
6) Check that cup positions 20, 25 and 30 have been correctly omitted in the print-out.

**Note:**
**During these tests it is important to take care over the handling and preparation of samples or solutions. It is suggested:**
- **— use gloves to avoid dirtying the cups;**
- **— use fresh solutions;**
- **— do not use cold solutions, but allow them to reach ambient temperature;**
- **— in the case of precision tests, use a single solution sufficient to fill the whole plate;**
- **— start the test as soon as the plate has been filled.**

5.4.0
## SERVICE TEST PROGRAMS

Part of the IL 943 memory is dedicated to special programs of particular use to the service engineer. These programs may be divided into two main groups.
a)
Programs also available to the Client:
— Aspiration test.
— Probe adjustment test
— Printer test
— Electronic signal test
b)
Programs available only to the service engineer and useful during troubleshooting or instrument calibration.

5.4.1
**GENERAL TEST**

At any time after switch-on of the instrument, with the flame on or off and provided the instrument is not carrying out other instructions such as Busy, Calibration or Sampling etc., entry into the test programs is achieved by activating the Serum, Prediluted and Test keys in sequence.
(**Note:** The tip must be in the Stat position).
A four second « lamp test » immediately follows this action, following which any one of the four tests listed above may be performed.
The aspiration test will only work if the flame is on, as will be clear later, all other tests may be performed with the flame on or off.

1) **Aspiration test**
(Flame On) (See also section 5.2.1).
Place the aspiration tip in the prediluted holder and 1 cc of acqueous solution containing 1,5 mmol/litre $Cs^+$ (eg. Cs diluent part no. 97564) in a suitable container.
Offer the 1 cc of solution to the aspiration tip. When the computer detects the presence of Cesium in the flame a seconds counter starts to operate, the time being shown in the sodium display.
When Cesium is no longer present, i.e. the solution has been completely aspirated the counter drops showing the total time elapsed on the display. When a fresh solution is aspirated the counter automatically zeroes and restarts.
The maximum time that can be measured is 256 seconds.

**Note:**
If the instrument is not aspirating or the Cs channel of the preamplifier is defective then no counting will take place and the Cs low indicator will be on.

2) **Probe adjustment test** (Flame On or Off)
After the same start up sequence and « Lamp Test » the autocal key is activated. The dilutor aspirates drawing in 2 ml of diluent after which the sample probe moves into the spinning cup and the 2 ml of Cs diluent are dispensed into the cup.
The probe remains in position so that the operator may adjust the probe position. The correct position is with the probe tip entering the surface of the dispensed liquid to a distance of 1 mm ± 0,5 mm. Reactivating the autocal key returns the probe to the stat position and avacuate the spinning cup.

3) **Printer test**
For this test the autozero key is activated after the start up sequence.
The computer then causes the printer to print-out three lines of print containing the characters used in the IL 943 in the format shown below.

```
------------
#0123456789#
#ABCDEiKLMN#
#OPIRSTUZ?I#
------------
```

**Note:**
This test is active only if, the printer was ON before entering the start up sequence.

4) **Electronic signal test**
Following the prescribed start up conditions and « Lamp Test » a series of keys may be activated t display on the Sodium and Potassium displays th digital value (points) of the various signals at the output of the A/D converter (U28) on the single board computer.

The following table shows the sequence of tests, the channels displayed and the values to be expected when aspirating in the prediluted mode the solutions listed.
This group of tests must be started by activating Sample, Dilutor Prime; if it is desired to return to the display of channels as defined by the start combination then the Autosample key must be activated.
The Prediluted key exits from this sub-test and returns to the condition at the end of Lamp Test and with the seconds counter activated.

| Activated key | Na display | K display | Aspirated solutions | Na display value | K display value |
|---|---|---|---|---|---|
| **Sample Prime** * | NA<br>x 1 | K x<br>1 ser. | 140/5/1<br>Cs diluent+ | 1610 ± 40%<br>200 ÷ 350 | 790 ± 40%<br>200 ÷ 350 |
| **Urine** | NA<br>x 1 | K x<br>1 ur. | 140/5/1<br>Cs diluent | 1610 ± 40%<br>200 ÷ 350 | 340 ± 40%<br>200 ÷ 350 |
| **Lithium** | Cs | Li | 140/5/0+<br>no solution<br>140/5/1<br>Cs diluent | 2150 ± 40%<br>200 ÷ 300<br>2150 ± 40%<br>2150 ± 40% | 200 ÷ 350<br>200 ÷ 300<br>515 ± 40%<br>200 ÷ 350 |
| **Serum** | NA<br>x 2 | K x<br>2 ser. | 140/5/1<br>Cs diluent | 2880 ± 40%<br>200 ÷ 350 | 1120 ± 40%<br>200 ÷ 350 |
| **Stat** | NA<br>x 2 | K x<br>2 ur. | 140/5/1<br>Cs diluent | 2880 ± 40%<br>200 ÷ 350 | 400 ± 40%<br>200 ÷ 350 |
| **Autosample** | NA<br>x 1 | K x<br>1 ser. | (Return initial conditions) | | |
| **Prediluted** | Exit from sub-test (Return to seconds counter) | | | | |

* This test is used during checking of basic instrument function and flame adjustment (see section 5.2.0).
+ The aspiration of these solutions causes offset values to be displayed.

**Note:**
The value of the « points » displayed depends upon the following factors:

a) the flame setting,
b) the aspiration rate,
c) the setting of the preamplifiers,
d) the accuracy of the aspirated solution.

The values given in the above table are those for a correctly calibrated instrument at 25°C, 50% RH, 760 mmHg barometric pressure.
Under any practical conditions variations of up to ± 100% or more may be noted although the service engineer can reasonably expect that the various channels move together, i.e. all high or all low.
The instrument will calibrate correctly provided that the value of points in the Cs channel lies between 1000 and 4000 but the performance at the extremes of measuring range (eg. 0 - 200 mmol/litre $Na^+$) may be impaired if the other channels are also at the limits of range. (See also section 5.4.2. test t10 - t17).

**Exit from group 1 tests**

To move between any one of the above group of tests (1.-4.) it is only necessary to activate the necessary initial key for the new test after completion of the previous test. (Note: to complete test 2 the sample probe must be in the Stat position and to complete test 4 the Prediluted key must be activated). Exit from any point in the group 1 tests is achieved by activating the Test key.

5.4.2
**SPECIAL TESTS**

A series of special tests available to the service engineer make use of a hidden key on the instrument touch panel. These tests are referred to as « t » tests because of the appearance of the letter « t » in the most significant digit position of the Na display when selecting the test to be performed. The figure following shows the numeration of the keyboard and the position of the « t » key used in this group of tests.
eg: to select test 35 activate Sample-Stat
to select test 02 activate Prime-Serum

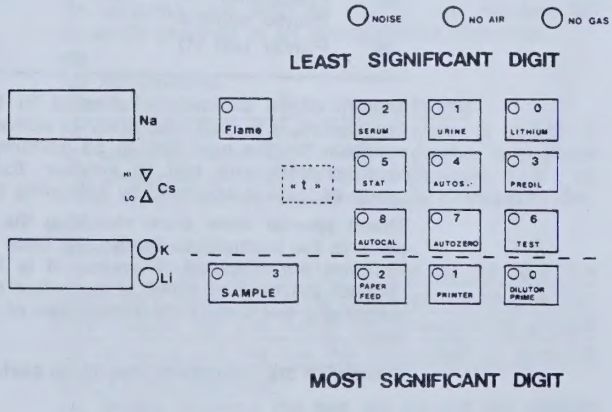

**Note:**

« t » is not marked on the keyboard.

To enter into this group of tests it is necessary that the probe be in the Stat position and the instrument in the Serum, Prediluted mode, as for the general tests. Activate test and at the end of « Lamp Test » activate Sample - t.

The following table summarizes the tests at present available:

| TEST | SCOPE | NOTE |
|---|---|---|
| 00 | Internal Ram Test | |
| 01 | External Ram Test | |
| 02 | Keyboard Test | Checks function of keyboard |
| 05 | Sensor test | Tests major sensors |
| 10 | Permanent scan Na x 1 channel | Used for preamp. set up |
| 11 | Permanent scan Na x 2 channel | |
| 12 | Permanent scan Kur x 1 channel | |
| 13 | Permanent scan Kur x 2 channel | |
| 14 | Permanent scan Kser x 1 channel | Used for preamp. set up |
| 15 | Permanent scan Kser x 2 channel | |
| 16 | Permanent scan Li channel | Used for preamp. set up |
| 17 | Permanent scan Cs channel | Used for preamp. set up |
| 18 | Continuous display after data ready | Na, K and Li channels |
| 20 | Probe right | |
| 21 | Probe left | |
| 22 | Dilutor test | |
| 23 | Aspirator tip test | |
| 24 | Mixing cup right | |
| 25 | Mixing cup left | |
| 26 | Air electrovalve | Flame off |
| 27 | Gas electrovalve | Flame and gas off |
| 28 | Ignition | Flame and gas off |
| 30 | Autosampler test | |
| 31 | Printer test (0) | |
| 32 | Mixing cup agitation test | |
| 33 | « Dot » check | |
| 34 | Preparation of diluted sample | |
| 35 | Printer test (1) | |

Except where otherwise indicated in the detailed description, it is only necessary to activate the code numbers for the next test to be performed in order to pass from one test to another. Exit from this group of tests is achieved by activating the Test key.

**These special tests allow checking the mechanical parts in the instrument. During the tests some safety systems are disabled. Therefore it is important to respect the caution notes of each test and to avoid entering a test before the completion of the previous one.**

**Otherwise the instrument may try to perform different operations, at the same time, with the risk of damage to mechanical and/or electronic components.**

**Detailed description**

**t00**

**Internal Ram Test.**

This checks the Ram within the microprocessor on the single board computer. In the case of error the signal Err will appear in the K/Li display, otherwise the signal End appears.

**t01**

**External Ram Test.**

This test checks the Ram's type 4118 on the single board computer. In the case of error the signal Err appears in the K/Li display, otherwise the signal End appears.

**t02**

**Keyboard Test.**

This test allows each key on the keyboard to be tested. The display K/Li shows a code if operating the relevant key is detected. The various codes corresponding to the keys are as follows.

| | | | |
|---|---|---|---|
| Lithium | 00 | Test | 20 |
| Urine | 01 | Autozero | 21 |
| Serum | 02 | Autocal | 22 |
| Flame | 04 | Prime | 30 |
| Predil. | 10 | Printer | 31 |
| Autos. | 11 | Paper Feed | 32 |
| Stat | 12 | | |

To exit from this test activate sample, then any other test may be selected.

**t05**

**Sensor Test.**

This test checks the function of the dilutor, sample probe, flame, air, gas and autosampler sensors during the normal functioning of the instrument. Once entered, the keyboard becomes operative in its normal mode but the display shows the states of the various sensors as follows:

| | | | | |
|---|---|---|---|---|
| Na display<br>K display | Dilutor Plate position | A probe Cuvette Presence | B probe Air | Flame Gas |

The Flame, Cuvette presence, air and gas sensor are at « 1 » when the items to be detected are present. The Plate position sensor is at 1 when the autosampler plate is correctly aligned.

The dilutor sensor indicated 1 when the dilutor is at bottom dead centre or rising. The probe sensors indicate as follows:

| | Sensor A | Sensor B |
|---|---|---|
| Probe moving | 0 | 0 |
| Probe in Stat | 1 | 0 |
| Probe in Autosampler | 0 | 1 |
| Probe in mixing cup | 1 | 1 |

Cuvette presence is active only with flame ON.

To exit from this test press Prediluted and test keys.

**t10 - 17**

**Permanent scanning of one channel.**

These tests enable service engineer to check the performance of each channel while aspirating solutions in the prediluted mode. The test shows on the K/Li display the signal in millivolts at the output of the pre-amplifier sub-unit for channel as selected by the « t » number. The follow table shows the signals to be expected when aspirating known solutions. To exit from this test activate Test key.

**Note:**

If further tests are to be performed the test entry sequence has to be repeated in full.

| Test number on Na display | Channel on K/Li display | Solution Prediluted | K/Li display value |
|---|---|---|---|
| 10 | Na x 1 | 140/5/1<br>Cs diluent | 3920 mV ± 30%<br>480 ÷ 850 mV |
| 11 | Na x 2 | 140/5/1 | 7000 mV ± 30% |
| 12 | K x 1 ur. | 140/5/1 | 820 mV ± 30% |
| 13 | K x 2 ur. | 140/5/1 | 980 mV ± 30% |
| 14 | K x 1 ser. | 140/5/1<br>Cs diluent | 1920 mV ± 30%<br>480 ÷ 850 mV |
| 15 | K x 2 ser. | 140/5/1 | 2730 mV ± 30% |
| 16 | Li | 140/5/0<br>140/5/1 | 800 mV ± 30%<br>1250 mV ± 30% |
| 17 | Cs | 140/5/1<br>nothing | 5260 mV ± 30%<br>480 ÷ 750 mV |

**Note:**

The value of the « mV » displayed, depends upon the following factors:

a) the flame setting,
b) the aspiration rate,
c) the setting of the preamplifier,
d) the accuracy of the aspirated solution.

The values given in the above table, are those for correctly calibrated instrument at 25°C, 50% RH, 760 mmHg of barometric pressure.

Under any practical conditions, variations of up to ± 100% may be seen but normally the various channels all move together, i.e. all high, or all low.

If the values measured are near the limits or out of range, check the aspiration rate (see section 5.2.1) and the cleanliness of the burner area and optical filters.

If the measured values are still at the limits or out of range, carryout the flame setting (see section 5.2.2) and repeat the test « t10 - 17 ».

If the values are still not within specifications, carry out the preamplifier setting (see section 5.2.3.).

**t18**

**Continuous display after data ready.**

After selecting this test the keyboard resumes its normal function with the test led flashing.

During sampling the display is not frozen at data ready but continues showing the values displayed in mmol until the next sample is made. This provides an alternative method of checking the stability. of aspiration and flame during sampling. **This test is only valid in prediluted mode.**

To exit from this test activate the Prediluted and Test keys.

**t20**

**Probe right.**

Calling this test causes the sample probe to move 1/4 turn in the anticlockwise direction i.e. from sampler to Stat or Stat to mixing cup.

If the probe is already in the mixing cup the test is ignored.

The K/Li display shows the state of the A and B sensors with A to the left.

**t21**

**Probe left.**

Calling this test causes the sample probe to move 1/4 turn in the anticlockwise direction i.e. from mixing cup to Stat and Stat to Autosampler. If the probe is already in the autosampler position the test is ignored.

The probe sensors A and B are displayed as for test t20.

**t22**

**Dilutor test.**

To enter into this test the probe must be in the Stat position.

Once activated a complete cycle of dilutor prime is carried out terminating when the probe has returned to the Stat position and the mixing cup has evacuated. During the test the state of the dilutor sensor is indicated in the K/Li display as follows:

| State of sensor | Action |
|---|---|
| 0 | Dilutor aspirates |
| 1 | Dilutor at bottom dead centre, probe moves to mixing cup |
| 1 | Dilutor dispenses |
| 0 | Dilutor at top dead centre, probe returns to Stat position, mixing cup evacuated. |

**During the dilutor cycle, check that at the lower and upper position of the pistons, the shaft is free from either surfaces of the cam.**

**t23**

**Aspiration tip test.**

On entering this test the tip is lowered into the mixing cup for a period of approximately 20 seconds.

**t24**

**Mixing cup right.**

On entering this test the mixing cup rotates for about 20 seconds in a clockwise direction.

**t25**

**Mixing cup left.**

On entering this test the mixing cup rotates for about 20 seconds in an anticlockwise direction.

**t26**

**Air electrovalve.**

The flame must be off to enter this test.

On entering the test the Air electrovalve is activated for about 20 seconds. The K/Li display will show the presence or absence of air pressure (« 1 » or « 0 »). During the test the compressor (if used) is ON.

**t27**

**Gas electrovalve.**

To enter this test the Flame must be off and the instrument must not detect the presence of gas. For this reason the gas bottle (or connection) should be removed and the gas line evacuated by opening the shut-off regulator.

i.e. Before entering the test the no-gas led should be illuminated.

On entering the test the gas electrovalve is activated for about 20 seconds. The K/Li display will show « 0 » (gas absent). During the test the air compressor and the air valve are ON.

**t28**
**Ignition.**
As for t27 the Flame must be off and the instrument must not detect the presence of gas.
On entering the test 10 sparks of duration 20 msec at 1 second intervals will be given. If gas is detected during the performance of this test, the test is aborted.

**t30**
**Autosampler test.**
To enter into this test the probe must be in the Stat or mixing cup positions.
On entering the test the autosampler plate advances by one position, the state of the plate position and cup presence sensors being shown in the K/Li display with the cup presence as the most significant digit diplayed.
The sequence of display is as follows:

| K/Li display | | Action |
|---|---|---|
| 1 | 1 | Start condition cup present |
| 0 | 0 | Plate moving |
| 0 | 1 | Rest condition cup absent |
| 1 | 1 | Rest condition cup present |

**t31**
**Printer/Sampler board test (0)** (see also test 35).
To enter into this test the probe must be in the Stat position.
Entering 31 the sampler tray starts to rotate and the ports of the 8255 on the printer/sampler board (see section 4.4.0) are energized as follows:

| | | |
|---|---|---|
| PAØ - PA4 | - | High |
| PA5 | - | Low |
| PA6 | - | High |
| PA7 | - | Low |
| PBØ - PB7 | - | Low |
| PCØ - PC3 | - | Low |
| PC4 - PC7 | - | High |

If the sampler tray does not move error will be indicated.
To exit from this test activate once more 31.

**t32**
**Mixing cup agitation test.**
On entering this test a complete agitation cycle will take place. Total duration = 8,4 seconds.
Rotation in each direction ≅ 200 milliseconds.

**t33**
**Dot check.**
During this test each of the 5 dot circuits is energized in turn for a period of time sufficient to cause the dot fail circuit to operate.
In the case of error the K/Li display will indicate Er together with the state of various Dot Fail as seen by the microprocessor. This information is quoted in hexadecimal form in two digit positions

-- dot 1 dot 2, - dot 3 dot 4 dot 5.

Example:
The computer should read an « 1 » for every correct operation. Assuming that dot 2 does not work the digit positions will contain the following sequence: -- 11, - 101.
and the display will be: Er 35.

**t34**
**Preparation of diluted sample.**
Offer the solution to be diluted to the probe, which must be in the Stat position. Activate code 34. When the sonalert sounds remove the solution and reactivate code 34. The probe now moves to the mixing cup and the diluted solution is dispensed. The probe then returns to the Stat position when the action may be repeated if desired.

**Note:**
No mixing takes place so the diluted solution may not be homogeneous.

**t35**
**Printer/Sampler board test (1)** (see also test 31).
To enter into this test the probe must be in the stat position, and a cuvette in the cup measuring position.
Entering 35 the ports of 8255 on the Printer/sampler board (see section 4.4.0) are energized as follows:

| | | |
|---|---|---|
| PAØ - PA7 | - | High |
| PBØ - PB7 | - | High |
| PCØ - PC4 | - | Low |
| PC5 | - | High |
| PC6 | - | Low |
| PC7 | - | High |

Error will be indicated if the sample plate moves or the cup precence indicator recognizes no cuvette. To exit from this test press 35 again and the autosampler plate will move on one cup position.

5.5.0
## SHUT DOWN PROCEDURES AND PRECAUTIONS FOR INSTRUMENT SHIPMENT

In this section the procedures to be adopted for short and long term shut down of the equipment together with the preparation of the instrument for shipment are described.
The instrument is designed to be left switched on with the flame off for periods of up to several days. This means that the instrument is in a state of readiness such that measurements may be made within about 5 minutes after flame on.
The short term shut down procedure relates to the preparation of the instrument for these conditions.

5.5.1
**SHORT TERM SHUT DOWN PROCEDURE**

With the instrument in the Stat mode activate the flame key.
The flame led will then start flashing while a dilutor prime cycle takes place.
Aspiration of cesium diluent from the spinning cup lasts for about 1 minute. This is sufficient to clean the aspiration tubes and atomizer of serum residues (see also sec. 3.2.12).

— When the flame led and the compressor (if used), are switched off, close the gas shut-off regulator (see fig. 5).
— Check the glass bell on the air filter (fig. 5) for evidence of moisture collected during operation. Release moisture if evident by loosening the screw at the bottom of the filter.
If considerable moisture has collected, the glass bell may be completely unscrewed from the filter body and dried out.
— If a compressor has been used the glass bell of the compressor should also be checked.

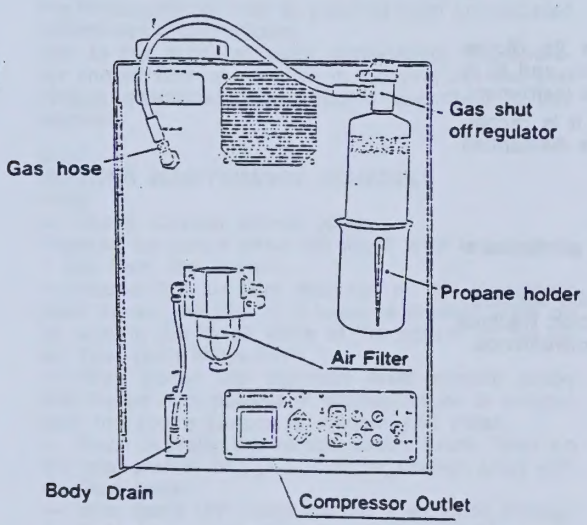


Fig. 5 - Back panel.

— Clean the external surface of the probe (see fig. 5a item f) with distilled water or alcohol.
— Remove the anti evaporation cover on the autosampler and clean the sample probe brush with distilled water.
Replace in position.
— Empty the waste container.

The instrument may now be left in this condition « STANDBY-FLAME OFF » (see also section 3.2.2).

5.5.2
**LONG TERM SHUT DOWN**

If the instrument is not be used for a long period of time then it is recommended that after completing the operations outlined in 5.5.1 the following actions be taken:

— Remove the gas bottle and then open the shut-off regulator to eliminate gas from the gas line.
— Switch off the instrument and disconnect the power cord from the mains supply.
— Cover the instrument with a dust cover to protect from excessive dust penetration.

5.5.3
**SHIPMENT PRECAUTIONS**

If the instrument is to be shipped carry out the instructions listed in 5.5.1 followed by the following steps:

a) Remove the Cs diluent bottle (fig. 5a item a).
b) Activate the dilutor prime key at least 3 times. This will empty all tubings of liquid but leave the dilutor chambers half full. (Note: the dilutor must be left with liquid for shipment to avoid crystals or dirt which could cause damage to the seating and o-rings of the pistons).
c) Close the shut off regulator and remove the gas bottle.
Reopen the regulator to eliminate all gas from the line.
Disconnect the gas hose (fig. 5) and cover the instrument gas line input with adhesive tape.
d) Remove the propane fuel cylinder holder (fig. 5).
e) Disconnect the air line from the air filter and, if used, the compressor power plug from the rear socket (fig. 5).
f) Unscrew and dry out, if necessary, the air filter bell, then replace.
Repeat this operation for the compressor filter, if used.
g) Pack the compressor separately.
h) Switch off the instrument and disconnect the power cord.
i) Remove the sample plate and evaporation ring from the autosampler and pack separately.
l) Remove and pack separately the glass chimney, cover chimney, and the flame housing cover. Protect the burner area from dust.
m) Disconnect the waste tube from the nebulizer (fig. 5b) and drain out the liquid. Then riconnect the tube. Remove the tube from the waste outlet (fig. 5a item e).
n) Disconnect the tygon tube from the sample probe and connect it to the free end of the Cesium aspirator (figure 5a item b) to inhibit evaporation from the dilutor chamber. Remove the sample probe.
Protectively wrap the probe and tape it near the Cesium aspirators to the inside of the diluent bottle chamber.

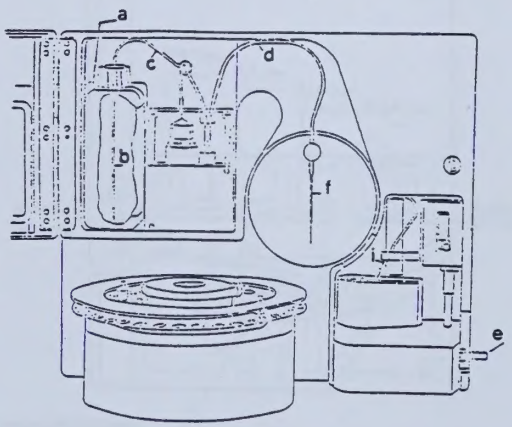


Fig. 5 a - Fluid Handling System

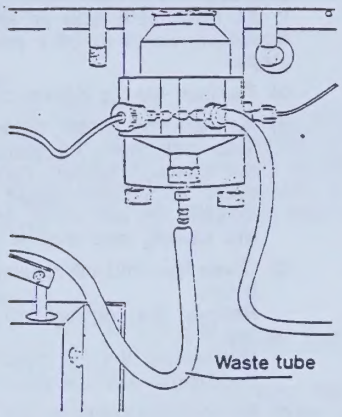


Fig. 5 b - Nebulizer

o) Remove and discard the aspiration tip (figure 5a item i), close the front panel cover and fix it with adhesive tape to the side of the instrument.

If the original packing is not available it is recommented that the autosampler, if fitted, be dismantled from the instrument.
This is achieved as follows:

— Remove the instrument cover.

— Disconnect the flat cable from the printer/sampler board to the autosampler.

— Remove the three nuts which hold the autosampler in position and remove the sampler. Replace the nuts on the sampler studs for convenience.

— Replace the instrument cover.

The instrument may now be packed.

# SECTION SIX TROUBLESHOOTING

6.1.0
## ROUTINE MAINTENANCE

A special effort has been made to keep IL 943 Flame Photometer as free as possible from complicated maintenance procedures.
Due to the excellent parts accessibility, the operator should find no problem in carrying out the preventive maintenance procedures described in this section.

6.1.1
### ROUTINE MAINTENANCE SCHEDULE

**Daily**

— Check Cesium diluent level.
Replace the bottle when the liquid level is less than 1 cm from the bottom.
— Inspect the air filter mounted on the instrument back panel (see Fig. 1), if water is present drain off by turning the black valve at the bottom of the filter bowl (with flame OFF).
— Wipe gently the stainless steel sample probe with tissue light soaked in distilled water or alcohol until the probe surface is smooth and clean.
— Wash liberally the sample probe brush fitted on the evaporation ring (Autosampler version only) with distilled water.
— With flame ON check that air is expelled through the hole on the plug of the body drain (see figure 1). Use stylet (p/n 97338) to clear plugging.

**Monthly**

— Check the burner head and ignition block (see Fig. 1a) for the build up of encrusted salts.
Remove the glass chimney and clean the burner using a stiff fibre brush.
— Remove glass chimney and carefully wash it with slightly acid water, clean the clear windows with a gauze pad moistened in isopropanol.
Dry the glass chimney, replace it carefully.
Check and replace, if necessary, the coarse wire mesh (p/n 20168) of the flame housing cover.
— Clean the interference filters (see Fig. 1a) with a camel hair brush.
**Do not use water or any organic solvent.**
— Check that the aspiration sample line is free from obstruction.
Put the sample aspiration tip in prediluted position and put under it a beaker with a cleaning solution (e.g.: CONTRAD 2000 diluted 1 : 50 with distilled water). Aspirate this solution for at least 10 minutes so that possible dirt particles present in the atomizer may be removed.
After this operation aspirate a prediluted (1:10) serum in the atomizer directly from the sample aspiration tip to return to the optimum atomizer internal condition.

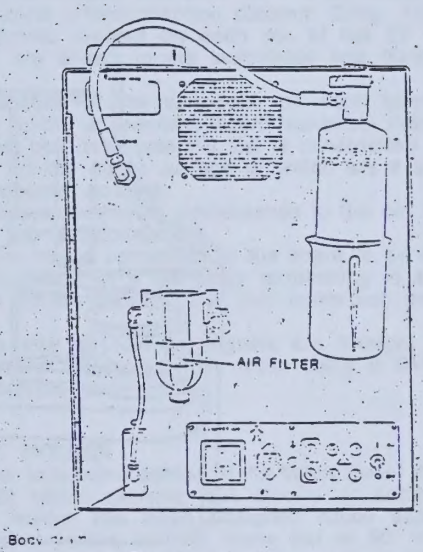


Fig. 1 - Back panel.

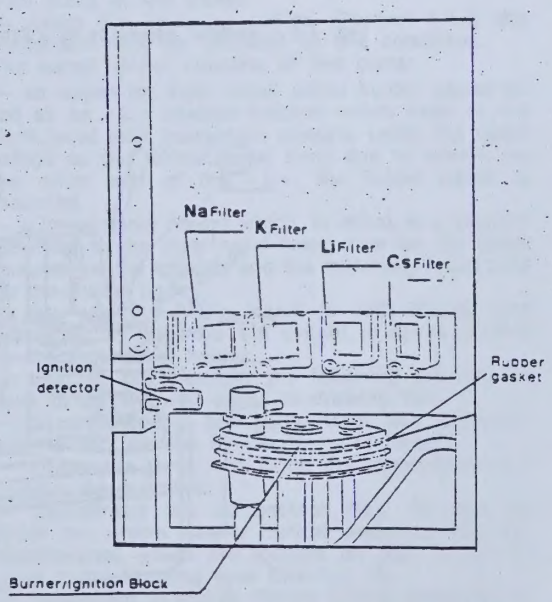


Fig. 2 - Flame housing.

— Replace sample aspirator Teflon® tip and sample injection nozzle Tygon® tubing (see Fig. 1b).
— Replace all the tygon tubes of the Fluidic system (Cs aspirator - dilutor electrovalve - sample probe).
— Clean spinning cup using a pad moistened in water and a mild detergent.
Remove spinning cup as follows (see figure 1c):
a) remove sample aspirator
b) remove outer waste cup lid
c) lift up waste cup (spinning cup will slip off its push fit housing).

**Do not scratch the cup inner walls.**
To replace the spinning cup, replace first the outer drain cup, push spinning cup gently in position, replace lid and sample aspirator.
— Clean the thermal printer head, passing through it a piece of special bond paper.

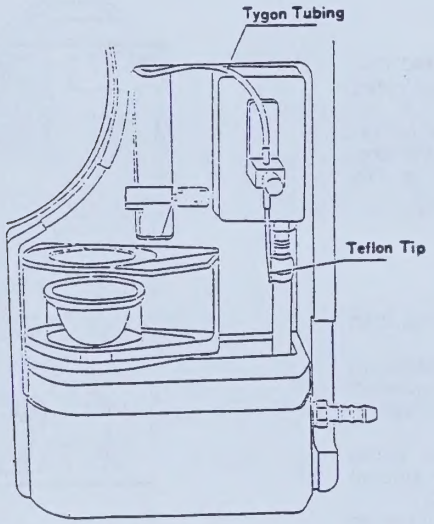


Fig. 1 b - Sample aspirator in « Prediluted » position

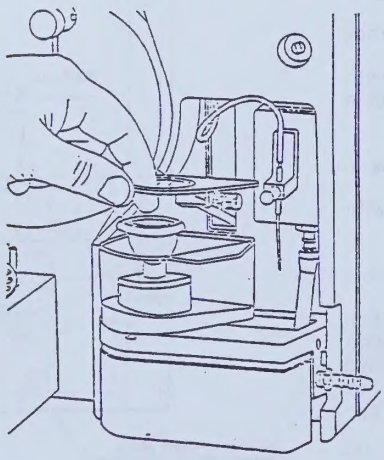

Fig. 1 c - Spinning cup removal

6.2.0
## SERVICE KITS

6.2.1
**943 SERVICE KIT, 110 V 60 Hz (USA version), P/N 70721-00**

| P/N | Description | Q.ty |
|---|---|---|
| 84977-00 | Single board computer | 1 |
| 84983-00 | 5 V digital rectifier board | 1 |
| 84984-00 | Power supply board | 1 |
| 98927-00 | Photodiode box assy | 1 |
| 84979-00 | Display board | 1 |
| 84980-00 | Printer/sampler board | 1 |
| 82338-00 | Printer assy | 1 |
| 98730-02 | Atomizer assy | 1 |
| 98730-01 | Burner assy | 1 |
| 95675-00 | Dilutor assy | 1 |
| 65722-00 | Gas plumbing assy (60 Hz) | 1 |
| 65721-00 | Air plumbing assy (60 Hz) | 1 |
| 97459-00 | Thrust electromagnet | 1 |
| 95044-01 | Sample probe motor assy (60 Hz) | 1 |
| 95043-01 | Dilutor motor assy (60 Hz) | 1 |
| 95042-01 | Spinning cup motor | 1 |
| 98928-00 | Flame indicator | 1 |
| 97335-00 | Aspiration tip needle assy | 2 |
| 97334-00 | Sample probe | 4 |
| 66674-01 | Cogged rubber belt | 1 |
| 82774-00 | Dilutor electrovalve | 1 |
| 73289-01 | Urethane tubing | 1 m |
| 82932-00 | Touch panel | 1 |
| 99046-00 | Gas line | 1 |
| 99142-03 | Air inlet tube | 0,35 m |
| 67987-00 | Spinning cup | 2 |
| 70901-00 | Dilutor optical switch | 1 |
| 82313-00 | Probe optical switch | 1 |
| 65183-10 | Teflon tip | 1 |
| 99095-00 | Air atomizer tubing pvc | 0,5 m |
| 95046-01 | Sampler motor assy (60 Hz) | 1 |
| 66935-00 | Cup optical detector | 1 |
| 84986-00 | Sampler optical switch assy | 1 |
| 97337-00 | Needle brush | 2 |
| 65706-00 | Dilutor flex coupling | 1 |
| 65719-00 | Probe flex coupling | 2 |
| 96345-00 | Compressor relay | 1 |
| 71989-00 | Bus I° assy (long) | 1 |
| 71990-00 | Bus II° assy (short) | 1 |
| 68922-00 | Fuse 10 AT 110 V 60 Hz (main) | 4 |
| 68906-00 | Fuse 8 AT 110 V 60 Hz (compressor) | 2 |
| 68925-00 | Fuse 0,8 AT 110 V 60 Hz (fan) | 2 |
| 68924-00 | Fuse 2,5 AT 110 V 60 Hz (instrument) | 4 |
| 99095-01 | Waste tube | 2 m |

6.2.2

**943 SERVICE KIT, 50 Hz, P/N 70722-00**

| P/N | Description | Q.ty |
|---|---|---|
| 84977-00 | Single board computer | 1 |
| 84983-00 | 5 V digital rectifier board | 1 |
| 84984-00 | Power supply board | 1 |
| 98927-00 | Photodiode box assy | 1 |
| 84979-00 | Display board | 1 |
| 84980-00 | Printer/sampler board | 1 |
| 82338-00 | Printer assy | 1 |
| 98730-02 | Atomizer assy | 1 |
| 98730-01 | Burner assy | 1 |
| 95675-00 | Dilutor assy | 1 |
| 65718-00 | Gas plumbing assy | 1 |
| 65717-00 | Air plumbing assy | 1 |
| 97459-00 | Thrust electromagnet | 1 |
| 95041-01 | Sample probe motor assy | 1 |
| 95040-01 | Dilutor motor | 1 |
| 95042-01 | Spinning cup motor | 1 |
| 98928-00 | Flame indicator | 1 |
| 97335-00 | Aspiration tip needle assy | 2 |
| 97334-00 | Sample probe | 4 |
| 66674-01 | Cogged rubber belt | 1 |
| 82774-00 | Dilutor electrovalve | 1 |
| 73289-01 | Urethane tubing | 1 m |
| 82932-00 | Touch panael | 1 |
| 99046-00 | Gas line | 1 |
| 99142-03 | Air inlet tube | 0,35 m |
| 67987-00 | Spinning cup | 2 |
| 70901-00 | Dilutor optical switch | 1 |
| 82313-00 | Probe optical switch | 1 |
| 65183-10 | Teflon tip | 1 |
| 99095-00 | Air atomizer tubing pvc | 0,5 m |
| 95045-01 | Sampler motor assy | 1 |
| 66935-00 | Cup optical detector | 1 |
| 84986-00 | Sampler optical switch assy | 1 |
| 97337-00 | Needle brush | 2 |
| 65706-00 | Dilutor flex coupling | 1 |
| 65719-00 | Probe flex coupling | 2 |
| 96345-00 | Compressor relay | 1 |
| 71989-00 | Bus I° assy (long) | 1 |
| 71990-00 | Bus II° assy (short) | 1 |
| 68914-00 | Fuse 5 AT 250 V (main) | 4 |
| 68915-00 | Fuse 4 AT 250 V (compressor) | 2 |
| 68916-00 | Fuse 0,8 AT 250 V (fan) | 2 |
| 68917-00 | Fuse 1,25 AT 250 V (instrument) | 4 |
| 99095-01 | Waste tube | 2 m |
| 68918-00 | Fuse 10 AT 125 V (main) | 4 |
| 68919-00 | Fuse 8AT 125 V (compressor) | 2 |
| 68920-00 | Fuse 2,5 AT 125 V (instrument) | 4 |

6.3.0

## SERVICE TOOLS AND INSTRUMENT DISMANTLING

A number of service tools are available for the IL 943 which will aid the technician both in the checking and troubleshooting of the electronic circuits and when repairing the fluidic assembly.
The construction, scope and use of these tools are described in the following sections.

6.3.1

### TEST BOX

The aim of the test box is to ease the checking of the principal signals of the various electronic boards.
The Power Supply, SBC, Printer/Sampler and Display boards are each provided with a single connector to which the principal signals are routed.
These connectors, identified as TP, are shown on the general interconnection diagram (Diag. 13).
The signals present on each pin of the TP connector are shown in the associated lists (Drawing 13a).
The location of the connector on each board is shown in the appropriate board assembly drawing.
The test box itself (see Fig. 3a) is constructed from a box on the upper surface of which are a series of numbered sockets.
The socket numbering corresponds to the pin number of the test connectors.
The test box is connected to the board to be checked by means of a flat cable terminating in a free socket which fits into the test connector on the board.
In this way all relevant signals are brought to a convenient measuring area when using a DVM or oscilloscope, etc.

6.3.2.

### PANEL HOLDER

In order to improve access to the fluidic panel (Drawing 10) whilst carrying out repairs or setting, a panel holder has been designed which supports the panel in the vertical plane but at 90° to the normal position (Fig. 3b). This allows free access to both sides of the panel.
By using the extender cables (Section 6.3.3) the instrument may be operated in this condition.
The panel holder consists of two parts:

— an upper (or right hand) panel holder constructed as an « L » shaped bracket which fixes to the right hand side instrument chassis, using the same fixings as the fluidic panel itself and to which, on the other arm of the « L », the fluidic panel is mounted.

— a lower panel holder which, in effect, is a support mounted to the right hand fixing hole for the autosampler on the chassis and the matching fixing hole on the fluidic panel.

In this way the fluidic panel is both braced and supported to minimize the weight to be supported by the right hand holder.
To use the panel holder the following instructions have to be followed (refer to drawing 10):

— disconnect the flat cable from the autosampler to P23 on the Printer/Sampler board;

— loosen the three nuts fixing the autosampler and remove the sub-unit;

— disconnect the connectors P31, 32 and 33 (from the probe, dilutor optical switches and the electrovalve) which are located on rear of the diluent bottle housing (see Drawing 10).

— disconnect J4 and J6 (Power Supply board) which are the connections to the probe and dilutor motors respectively;

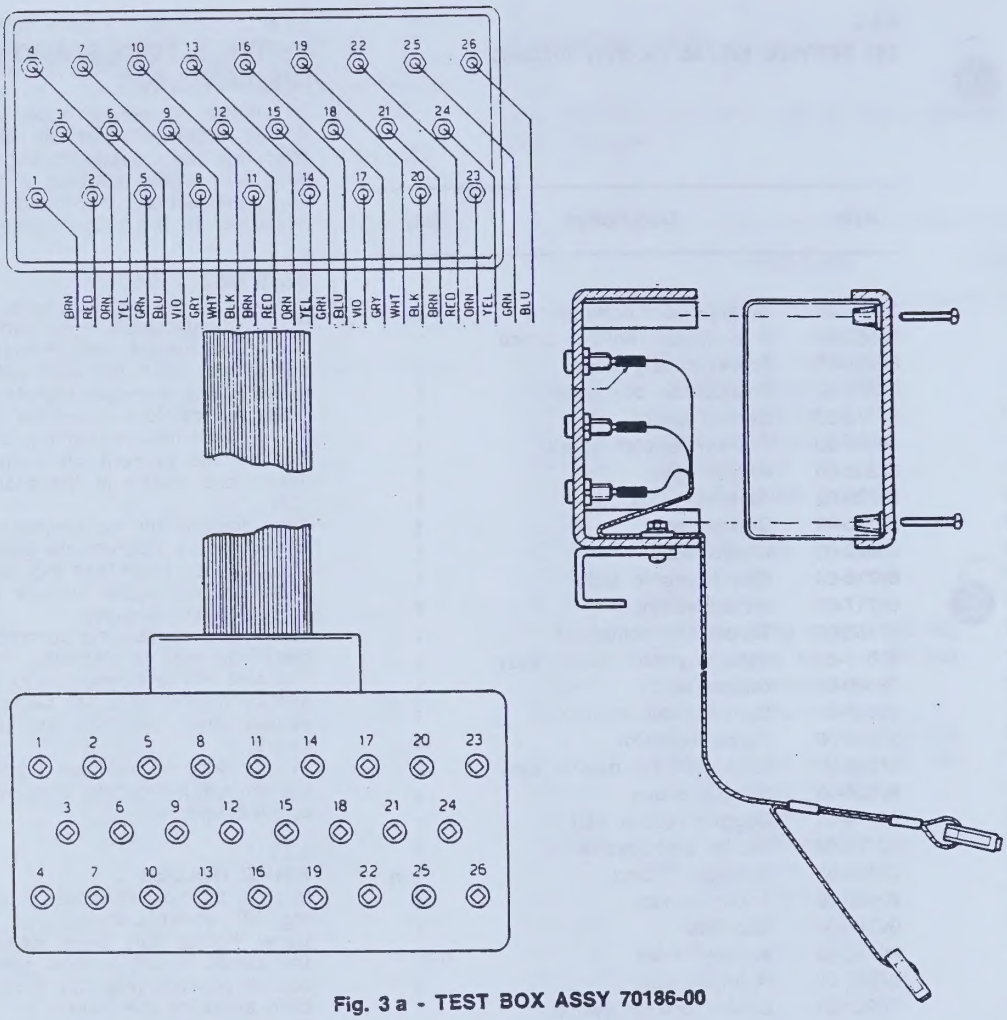


**Fig. 3 a - TEST BOX ASSY 70186-00**

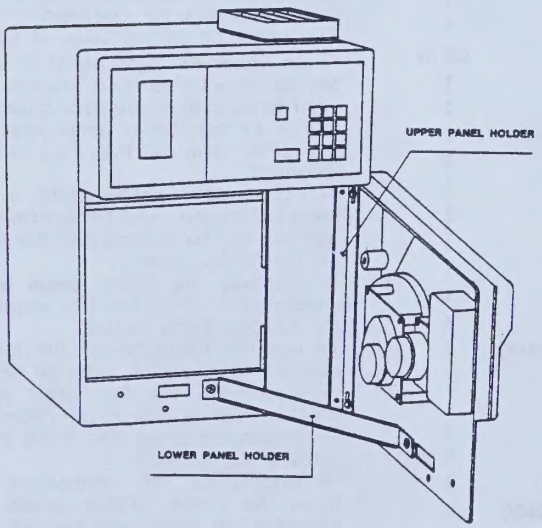


**Fig. 3 b - PANEL HOLDER TOOL 70725-00**

— disconnect the ground lead (see Diag. 10 item 24) from the fixing point on the right hand side of the transformer
— open the right hand door and remove the protective cover from the terminal strip below the atomizer
— remove the four socket head screws which fix the front panel
— fit the upper panel holder using two of the screws just removed
— use the remaining two screws to fit the fluidic panel to the upper panel holder
— fit the lower panel holder as shown in Fig. 3b using the holes provided for autosampler fitting and appropriate screws and nuts.

6.3.3
**EXTENDER CABLE**

When the front panel is mounted on the panel holder, the various cables which were disconnected from the Power Supply board and various terminals can be re-connected using the Extender Cable Assy (71997-00) and the Motor Extender Cable (71595-00) shown in Fig. N° 3d and Fig. N° 3c.
In this way the instrument can be maintained fully operative whilst having complete accessibility to the fluidic panel.

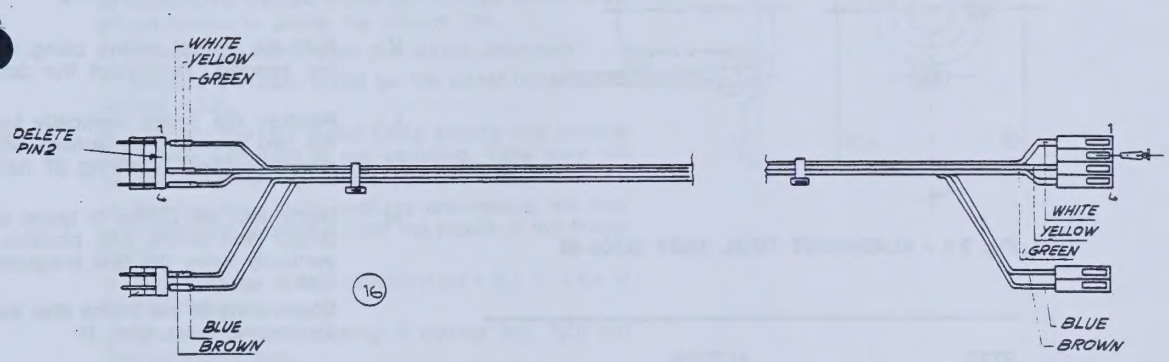


**Fig. 3 c - MOTOR EXTENDER CABLE ASSY 71595-00**

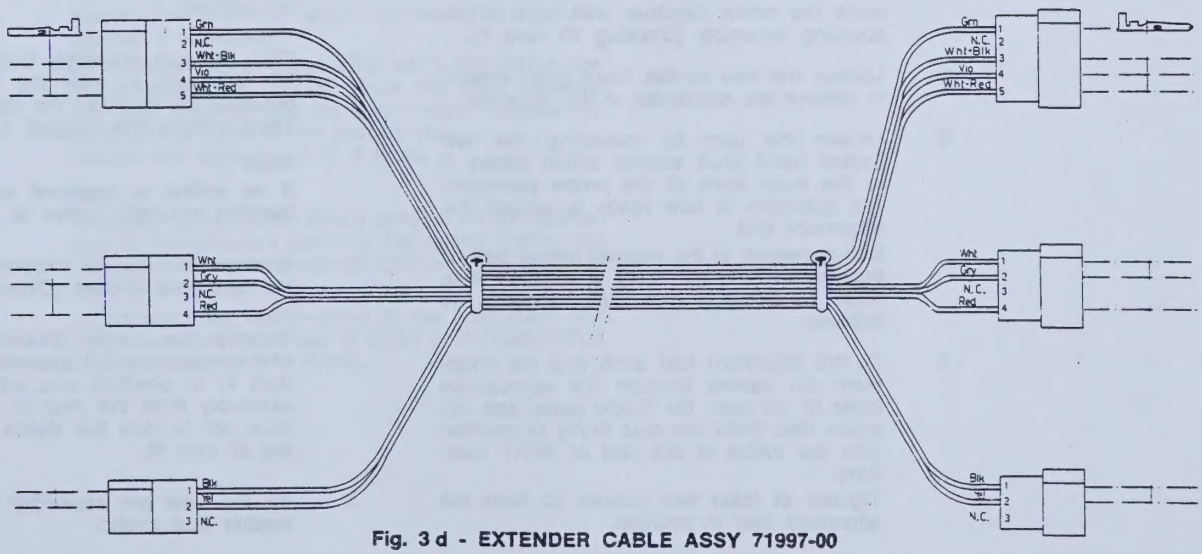


**Fig. 3 d - EXTENDER CABLE ASSY 71997-00**

6.3.4
**PROBE ALIGNMENT TOOL**

When the front panel is mounted on the panel holder it is possible to cneck or adjust the alignment of the probe and the positioning of the probe cam using the probe alignment tool shown in Fig. 3e.
The following description which refers also to drawings 10, 27 and 29 describes both the use of the alignment tool and details for the replacement of the cogged rubber belt (Drawing 27 item 13) or the bushing and pin assembly (Drawing 27 items 4 and 5).

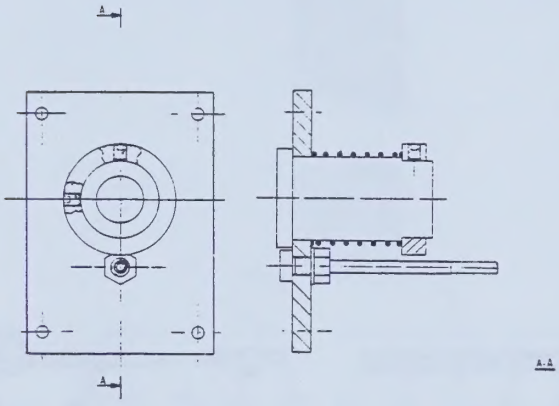

**Fig. 3 e - ALIGNMENT TOOL ASSY 99209-00**

| STEP | ACTION |
|---|---|
| A | Disconnect the optical switch connector and then dismount the optical switch itself taking care not to lose the metal spacers for each fixing screw. (Drawing 10 item 33). |
| B | Remove the four screws (Drawing 10 item 29) which fix the motor assembly and remove the motor together with part of the coupling assembly (Drawing 10 item 7). |
| C | Loosen the two socket head grub screws to remove the remainder of the coupling. |
| D | Loosen the cam by loosening the two socket head grub screws which clamp it to the main shaft of the probe assembly. The assembly is now ready to accept the alignment tool.<br>**If replacement of the cogged rubber belt or bushing and pin assembly is required then move to STEP N otherwise proceeds as follows:** |
| E | Fit the alignment tool such that the alignment pin passes through the appropriate holes in the cam, the fluidic panel and the probe disc (hold the disc firmly in position with the probe in the rest or STAT position). |
| | Tighten at least two screws to hold the alignment tool in position. |
| F | Fix the black cam to the main shaft of the probe assembly by tightening the grub screw on to the flattened position of the shaft (hold the probe disc pressed up against the front panel). |
| G | Remove the alignment tool and tighten the second grub screw of the black cam.<br>Check that there is no play between the probe disc, the fluidic panel and the black cam. Otherwise repeat the alignment procedure. |
| H | Fit the half coupling to the main shaft lightly tightening one of the grub screws to the flattened portion of the shaft. |
| I | Fit the motor with the other half coupling not forgetting the ground connection (Drawing 10 item 44) under one of the fixing screws.<br>Align and fix the coupling. |
| K | Refit the optical switch using the two neutral spacers, reconnect the connector. |
| L | Position the probe vertically by means of the two socket grub screws which fix the needle support (Drawing 27 item 2). |
| M | Reconnect the tubing in tygon between the dilutor and probe and position the probe vertically using the test program as described in section 5.4.1.<br>**Dismantling of the probe disc assembly Continuing from step D.** |
| N | Remove the black cam and the tygon tube connected to the sample probe.<br>Remove the three screws which fix the hub assembly (Drawing 27 item 10) to the fluidic panel and remove the complete disc assembly from the front of the panel. |
| O | Loosen the teflon belt stretcher washers (Drawing 27 item 11) by loosening the fixing screws. |
| P | Slide the hub assembly from the disc taking care not to lose the teflon washers between the hub and the disc.<br>Then remove the cogged rubber belt.<br>**Note:**<br>**if no action is required on the pin and bushing assembly move to STEP « T ».** |
| Q | Remove the needle support by loosening the two grub screws (Drawing 27 item 9). |
| R | Remove the circlip (Drawing 27 item 7) which holds the pin assembly (Drawing 27 item 4) in position and withdraw the pin assembly from the rear of the disc taking care not to lose the delrin washer (Drawing 27 item 8). |
| S | Fit the new pin assembly with the delrin washer and circlip. |

T Fit the new belt and the hub assembly with washers.
Adjust the tension of the belt using the teflon stretcher washers so that the belt is neither loose or overtight.

U Refit the probe disc to the fluidic panel by means of the three screws which fix the hub assembly to the fluidic panel pressing, at the same time, the probe disc to the front panel.

V Replace the black cam but do not tighten to the main shaft.

**Now continue from STEP « E » to complete alignment.**

6.3.5
## DILUTOR REPLACEMENT

The following procedure is to be followed in the case of replacement of the dilutor.
Refer to drawing n. 10.
a) Remove the cesium bottle and execute about three dilutor primes to empty the cesium line.

b) Remove the tubes from the dilutor chambers.

c) Mount the Fluidic panel on the panel holder (see section 6.3.2).

d) Unscrew the four motor fixing screws and remove the motor with part of the coupling. Take care not to lose the coupling centre part (item 6).

e) Remove the dilutor itself by unscrewing the four screws which support it from the inside of the fluidic panel.

f) To fit the new dilutor repeat steps « b » to « e » in reverse order.

g) Check that the coupling is neither too tight nor has excessive play.

h) Using the extender cable and the motor extender cable (see section 6.3.3.) connect the fluidic panel to the rest of the instrument.

i) Perform 4 or 5 dilutor primes, with the flame off, to fill the chambers completely with cesium diluent.
Check that, in the top and bottom dead centre positions, the motor shaft is free from either surfaces of the cam.

l) During aspiration, pinch the tube between the electrovalve and the larger chamber to eliminate bubbles if necessary.

m) Activate dilutor prime and, while the piston are rising (dispensing phase) pinch the tube between the large chamber and the electrovalve. Release the pressure as soon as the pistons stop.
Repeat this operation 4 or 5 times.

**Note:**

If during this operation ERR 2 appears on the display, due to overpressure blocking the dilutor motor, the instrument must be switched OFF and ON again to reset the system.

n) Remount the fluidic panel to the instrument and carry out a precision test in STAT or AUTOSAMPLE (if the autosampler is fitted).

# SECTION SEVEN DRAWINGS AND DIAGRAMS PARTS

7.1.0

## PARTS LIST

Attached is a list of spare parts for the IL 943 together with suggested stock levels, bearing in mind the number of instruments to be serviced. The objective of this list is not to impose a rigid requirement but rather to suggest minimum levels dependent upon the number of instruments in field and the ability to service them rapidly.

SUGGESTED MINIMUM INVENTORY OF SPARE PARTS
FOR SERVICING THE IL 943 FLAME PHOTOMETER

| P/N | Instruments Q.ty 2-5 | 5-15 | 15-50 | Description |
|---|---|---|---|---|
| | | | | **Accessories and option kits** |
| 67232-00 | 1 | 1 | 2 | Air compressor assy |
| 70723-00 | | | | Autosampler option kit (50 Hz) |
| 70723-01 | | | | Autosampler option kit (60 Hz) |
| 70724-00 | | | | Printer option kit |
| 70731-00 | | | | RS232C Interface kit |
| | | | | **Consumables** |
| 57000-12 | | | | Instrument propane fuel 12x0.45 |
| 65183-10 | 5 | 10 | 20 | Plastic tip kit 10/pkg |
| 73289-01 | 2 | 5 | 10 m | Urethane tubing i.d. 1.016 mm |
| 80072-04 | | | | Paper roll 4/pkg |
| 87036-00 | 2 | 5 | 10 | Stylet 0.35 mm |
| 65929-10 | | | | Sample cups 1000/pkg |
| 97337-00 | 5 | 10 | 15 | Needle brush assy |
| 99090-25 | 2 | 5 | 10 m | Tygon tubing i.d. 0.5 mm (sample tube) |
| 99095-00 | 1 | 3 | 5 m | Pvc tubing i.d. 4 mm (air tube) |
| 99095-01 | 3 | 8 | 15 m | Pvc tubing i.d. 6 mm (waste) |
| | | | | **Reagent and standards** |
| 33313-50 | | | | Std. Na/K/Li 140/5/1 mmol/l 50x1 ml |
| 35100-00 | | | | Std. 100 Na/100 K mmol/l 100 ml |
| 97517-50 | | | | 140 Na/5 K mmol/l ampoules 50x1 ml |
| 97518-50 | | | | 120 Na/2 K mmol/l ampoules 50x1 ml |
| 97519-50 | | | | 160 Na/8 K mmol/l ampoules 50x1 ml |
| 97564-04 | | | | Cesium diluent 1,5 mmol/l kit 4x500 ml |
| | | | | **Boards** |
| 82611-00 | | | | SBC board with RS232C interface assy |
| 84977-00 | 1 | 1 | 2 | SBC board assy |
| 84978-00 | 1 | 1 | 2 | Phototube board assy |
| 84979-00 | 1 | 1 | 2 | Display board assy |
| 84980-00 | 1 | 1 | 2 | Printer sampler board assy |
| 84981-00 | 1 | 1 | 2 | Sampler inteconnection board assy |
| 84983-00 | 1 | 1 | 2 | Rectifier board assy |
| 84984-00 | 1 | 1 | 2 | Power supply board assy |
| 84985-00 | 1 | 1 | 2 | Printer interconnection board assy 943 |

| P/N | Instruments Q.ty 2-5 | 5-15 | 15 50 | Description |
|---|---|---|---|---|
| | | | | **Spare Parts** |
| 20168-00 | 3 | 10 | 20 | Chimney screen |
| 20169-00 | 1 | 2 | 4 | Chimney ring cover |
| 22102-00 | 1 | 2 | 3 | Glass chimney |
| 23019-01 | — | 1 | 3 | Filter Na |
| 23019-03 | — | 1 | 3 | Filter K |
| 23019-05 | — | 1 | 3 | Filter Li |
| 23019-06 | — | 1 | 3 | Filter Cs |
| 24463-00 | 1 | 2 | 4 | Burner head assy |
| 24573-00 | 1 | 2 | 4 | Gas shut off regulator |
| 65184-00 | — | — | 1 | Sample probe assy |
| 65717-00 | 1 | 1 | 2 | Air plumbing assy (50 Hz) |
| 65718-00 | 1 | 1 | 2 | Gas plumbing assy (50 Hz) |
| 65719-00 | — | 1 | 2 | Sample probe coupling flex assy |
| 65721-00 | 1 | 1 | 2 | Air plumbing assy (60 Hz) |
| 65722-00 | 1 | 1 | 2 | Gas plumbing assy (60 Hz) |
| 66674-01 | — | 1 | 2 | Cogged rubber belt |
| 66929-00 | 2 | 5 | 10 | Air orifice assy |
| 66935-00 | 1 | 2 | 3 | Cuvette presence optical sensor |
| 67843-00 | — | — | 1 | Flame housing cover assy |
| 67986-00 | — | 1 | 3 | Cuvette drain |
| 67986-01 | — | 1 | 3 | Cuvette drain cover |
| 67987-00 | 5 | 10 | 20 | Spinning cup |
| 68332-00 | | | | Cuvette plate assy |
| 68906-00 | 3 | 5 | 10 | Fuse 8A 110V (6 x 32 mm slow blow) |
| 68914-00 | 5 | 10 | 20 | Fuse 5A 250 V (5 x 20 mm slow blow) |
| 68915-00 | 3 | 5 | 10 | Fuse 4 A 250 V (5 x 20 mm slow blow) |
| 68916-00 | 3 | 5 | 10 | Fuse 0,8 A 250 V (5 x 20 mm slow blow) |
| 68912-00 | 5 | 10 | 20 | Fuse 1,6AT 250 V (5 x 20 mm slow blow) |
| 68918-00 | 5 | 10 | 20 | Fuse 10 A 125 V (5 x 20 mm slow blow) |
| 68919-00 | 3 | 5 | 10 | Fuse 8 A 125 V (5 x 20 mm slow blow) |
| 68896-01 | 5 | 10 | 20 | Fuse 3,15AT 125 V (5 x 20 mm slow blow) |
| 68922-00 | 5 | 10 | 20 | Fuse 10 A 110 V (6 x 32 mm slow blow) |
| 68902-00 | 5 | 10 | 20 | Fuse 3,15ASB 110 V (6 x 32 ) |
| 68925-00 | 3 | 5 | 10 | Fuse 0,8 A 110 V (6 x 32 mm slow blow) |
| 70244-00 | — | — | 1 | Autosampler final assy (50 Hz) |

| P/N | Instruments Q.ty 2-5 | 5-15 | 15 50 | Description |
|---|---|---|---|---|
| 70244-01 | — | — | 1 | Autosampler final assy (60 Hz) |
| 70769-00 | — | 1 | 3 | Air filter assy |
| 70901-00 | 1 | 2 | 4 | Dilutor optical limit switch |
| 70951-00 | 2 | 4 | 8 | Assembly ignition electrode |
| 71560-00 | — | 1 | 2 | Prediluted holder knob assy |
| 71561-00 | — | 1 | 2 | Sample probe knob assy |
| 71989-00 | — | 1 | 2 | Bus I assy (long/upper) |
| 71990-00 | — | 1 | 2 | Bus II assy (short/lower) |
| 71992-00 | — | 1 | 2 | Power cord assy |
| 71996-00 | — | 1 | 2 | Power cord assy (USA domestic version only) |
| 82313-00 | 1 | 2 | 3 | Sample probe optical switch assy |
| 82322-00 | — | 1 | 2 | Fuel cylinder support |
| 82338-00 | 1 | 2 | 4 | Printer assy |
| 82352-00 | 2 | 4 | 8 | Photodiode assy |
| 82774-00 | 1 | 3 | 10 | Electrovalve assy |
| 82776-00 | 1 | 2 | 4 | Sample orifice assy |
| 82932-00 | — | 1 | 2 | Dead lite panel |
| 84986-00 | 1 | 2 | 4 | Sampler opt. switch board assy |
| 95040-01 | 1 | 2 | 3 | Dilutor motor assy (50 Hz) |
| 95041-01 | 1 | 2 | 3 | Sample probe motor assy (50 Hz) |
| 95042-01 | 1 | 2 | 3 | Spinning cup motor |
| 95043-01 | 1 | 2 | 3 | Dilutor motor assy (60 Hz) |
| 95044-01 | 1 | 2 | 3 | Sample probe motor assy (60 Hz) |
| 95045-01 | 1 | 2 | 3 | Sampler motor assy (50 Hz) |
| 95046-01 | 1 | 2 | 3 | Sampler motor assy (60 Hz) |
| 95126-00 | 1 | 2 | 3 | Cuvette protection assy |
| 95675-00 | 1 | 2 | 3 | Assy dilutor |
| 96345-00 | — | 1 | 2 | Solid state relay 240 Vac |
| 97334-00 | 5 | 10 | 15 | Sample probe needle assy |
| 97335-00 | 2 | 4 | 8 | Tip needle assy |
| 97336-00 | 1 | 2 | 3 | Cesium aspirator assy |
| 97338-00 | 3 | 10 | 15 | Body drain plug new stylet |
| 97459-00 | 1 | 2 | 3 | Thrust electromagnet assy |
| 98419-00 | 3 | 10 | 15 | Body drain plug assy |
| 98730-01 | 1 | 2 | 2 | Burner assy |
| 98730-02 | 1 | 2 | 2 | Atomizer assy |
| 98927-00 | — | 1 | 2 | Phototube box assy |
| 98928-00 | 1 | 2 | 3 | Flame indicator assy |
| 98930-00 | 1 | 2 | 3 | Photodiode Li assy |
| 99046-00 | 1 | 2 | 4 | Gas tube assy |
| 99142-03 | 1 | 2 | 3 m | Nylon tubing type 440 NF 1/4 |
| 99359-00 | — | 1 | 2 | Fan |
| | | | | **Manuals** |
| 80943-00 | 1 | 2 | 4 | Operator's manual |
| 80943-25 | 1 | 2 | 4 | Service manual |
| | | | | **Service Tools** |
| 70186-00 | | | | Test box assy |
| 70725-00 | | | | Fluidic panel holder kit |
| 70727-00 | 1 | 2 | 4 | Service tools kit |
| 71595-00 | | | | Motor extender cable assy |
| 71997-00 | | | | Extender cable assy |
| 99209-00 | | | | Probe alignment tool assy |

# 943 Drawing and diagram index


| | | |
|---|---|---|
| 1 | AIR PLUMBING ASSY | 65717-00 |
| 2 | AUTOSAMPLER ASSY | 70244-00 |
| 3 | ATOMIZER ASSY | 98730-02 |
| 4 | BURNER ASSY | 98730-01 |
| 5 | DILUTOR ASSY | 95675-00 |
| 6 | DILUTOR MOTOR ASSY | 95040-00 |
| 7 | DISPLAY BOARD ASSY | 84979-00 |
| 8 | DISPLAY BOARD SCHEMATIC | 82078-00 |
| 9 | FLAME INDICATOR ASSY | 98928-00 |
| 10 | FLUIDIC PANEL ASSY | 82936-00 |
| 11 | FRONT PRINT PANEL ASSY | 82937-00 |
| 12 | GAS PLUMBING ASSY | 65718-00 |
| 13 | GENERAL INTERCONNECTION DIAGRAM | 82081-00 |
| 14 | POWER SUPPLY BOARD ASSY | 84984-00 |
| 15 | POWER SUPPLY BOARD SCHEMATIC | 82080-00 |
| 16 | POWER SWITCH AND FUSES ASSY | 71045-00 |
| 17 | PREAMPLIFIER SUB-UNIT ASSY | 84978-00 |
| 18 | PREAMPLIFIER SUB-UNIT SCHEMATIC | 82079-00 |
| 19 | PRINTER INTERCONNECTION BOARD ASSY | 84985-00 |
| 20 | PRINTER SAMPLER BOARD ASSY | 84980-00 |
| 21 | PRINTER SAMPLER BOARD SCHEMATIC | 82077-00 |
| 22 | SAMPLER INTERCONNECTION BOARD ASSY | 84981-00 |
| 23 | SAMPLER MOTOR ASSY | 95045-00 |
| 24 | SINGLE BOARD COMPUTER ASSY | 84977-00 |
| 25 | SINGLE BOARD COMPUTER SCHEMATIC | 82076-00 |
| 26 | SPINNING CUP MOTOR ASSY | 95042-00 |
| 27 | SAMPLE PROBE ASSY | 65184-00 |
| 28 | TIP ELECTROMAGNET ASSY | 82204-00 |
| 29 | SAMPLE PROBE MOTOR ASSY | 95041-00 |
| 30 | TUBE GAS ASSY | 99046-00 |
| 31 | TRANSFORMER ASSY | 70804-00 |
| 32 | 5 V DIGITAL RECTIFIER BOARD ASSY | 84983-00 |
| 33 | FINAL ASSY WITH PRINTER AND AUTOSAMPLER | 70243-00 |
| 34 | AIR PLUMBING EXPLOSION VIEW | |
| 35 | GAS PLUMBING EXPLOSION VIEW | |
| 36 | DILUTOR EXPLOSION VIEW | |

| ITEM | CODE | DESCRIPTION | Qty | Assy |
|---|---|---|---|---|
| 1 | 96183-01 | Male connector | 1 | |
| 2 | 96317-02 | Regulator air (0-25) | 1 | |
| 3 | 65720-00 | Fitting | 1 | |
| 4 | 82775-01 | Solenoid valve | 1 | |
| 5 | 67059-00 | Pressure switch | 1 | |
| 6 | 95678-00 | Body drain | 1 | |
| 7 | 57350-00 | Nipple 1/4 | 1 | |
| 8 | 96195-01 | Male connector elbow 90° | 1 | |
| 9 | 65716-01 | Plug | 1 | |
| 10 | | | | |
| 11 | 56898-00 | Loctite 542 idraulermetic | | |
| 12 | 71049-00 | Plate assy | 1 | |
| 13 | 99588-03 | Screw M3x0,5 L=8 | 2 | |
| 14 | 96763-05 | Washer flat | 2 | |
| 15 | 96764-04 | Lock washer split | 2 | |
| 16 | 98419-00 | Drain plug assy | 1 | |
| | | | | |
| | | | | |
| | | | | |
| | 84005-39 | Mounting procedure air plumbing assy | | |
| | 84005-06 | Test, Proc, air plumbing 943 | | |

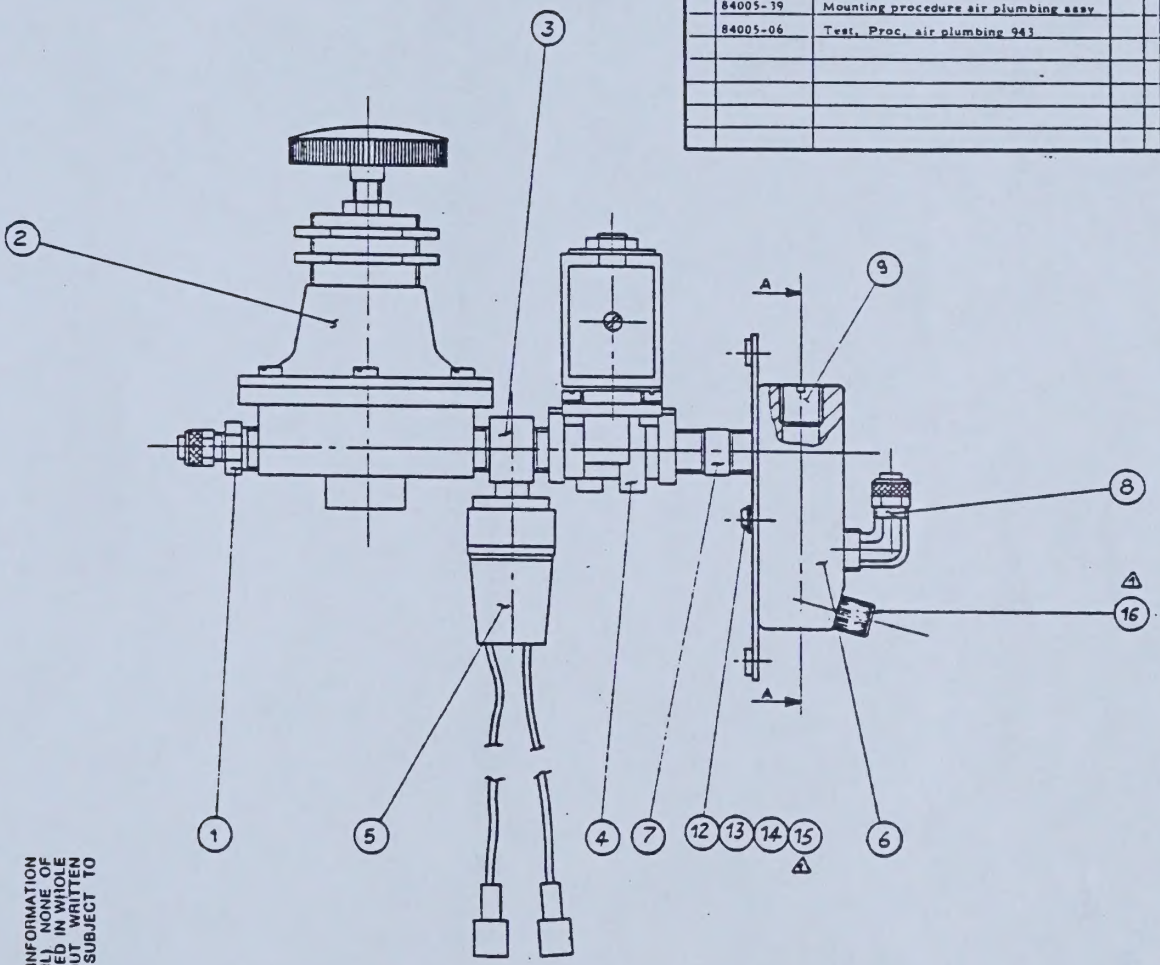


- THIS DOCUMENT CONTAINS PROPRIETARY INFORMATION OF INSTRUMENTATION LABORATORY SPA (IL) NONE OF WHICH SHALL BE COPIED, DISCLOSED OR USED IN WHOLE OR IN PART FOR ANY PURPOSE WITHOUT WRITTEN PERMISSION OF IL. THIS DOCUMENT IS SUBJECT TO RECALL BY IL AT ANY TIME -.

Instrumentation Laboratory

AIR PLUMBING ASSY

65717-00

1

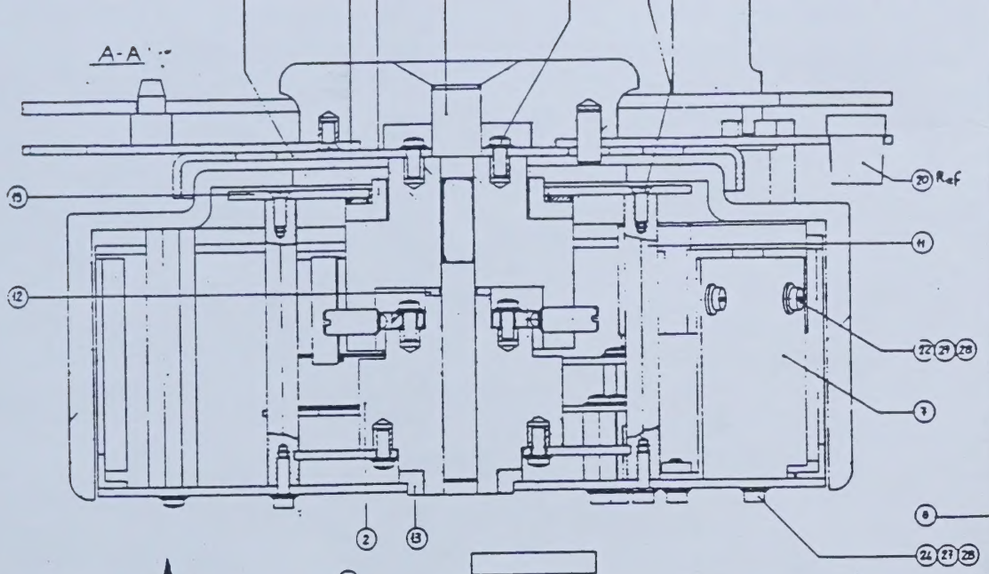


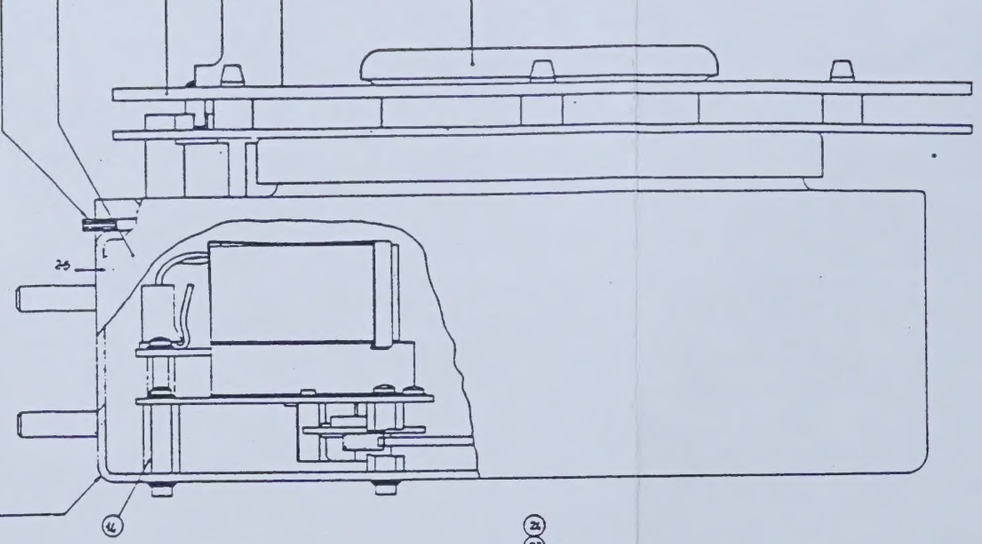


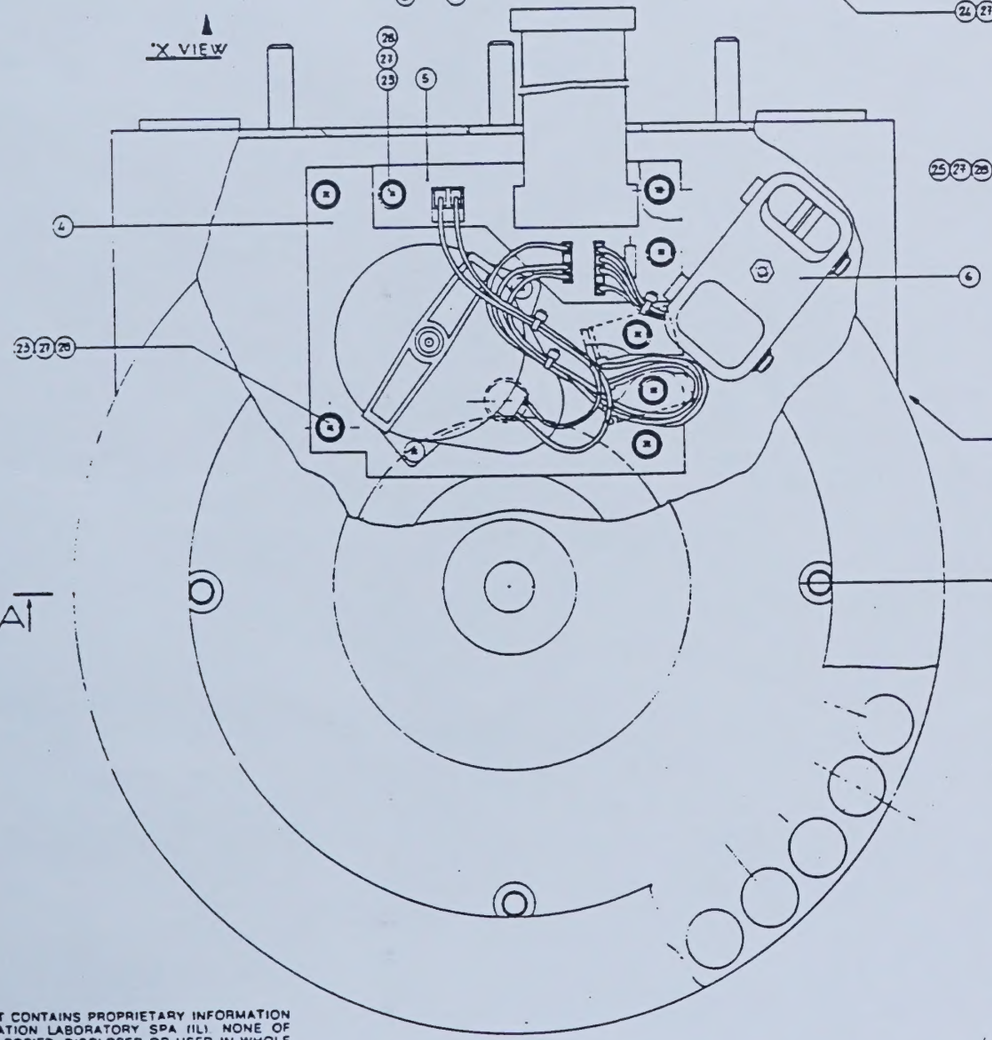


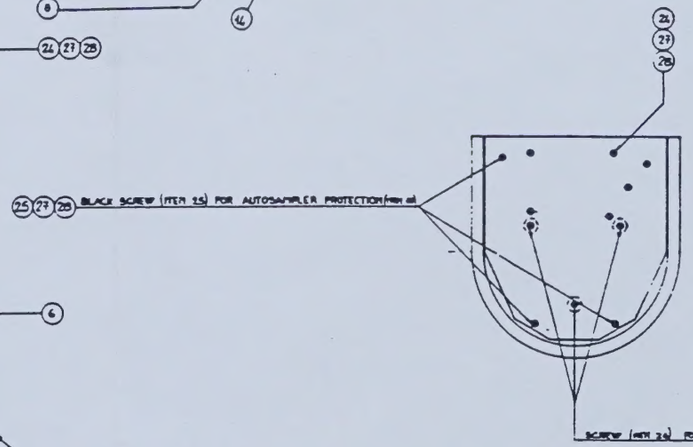
24 27 28
25 27 28 BLACK SCREW (ITEM 25) FOR AUTOSAMPLER PROTECTION from all
X. VIEW
Scale 1:2
SCREW (WITH 28) FOR COLUMN SPACER (qty 4)

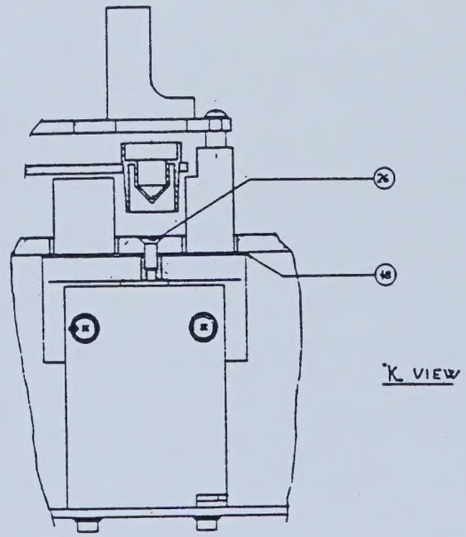


| ITEM | CODE | DESCRIPTION | Qty | ASSY |
|---|---|---|---|---|
| 1 | 95055-00 | POSITIONER HUB ASSY | 1 | A1 |
| 2 | 69224-00 | GEAR MOUNTING ASSY | 1 | A2 |
| 3 | 68112-00 | CUVETTE PLATE ASSY | 1 | A3 |
| 4 | 95045-00 | 10 r.p.m. MOTOR SUPPORT ASSY | 1 | A4 |
| 5 | 64981-00 | SAMPLER INTERCONNECTION BOARD ASSY | 1 | A5 |
| 6 | 66915-00 | OPTICAL SENSOR HOLDER ASSY | 1 | A6 |
| 7 | 82345-00 | ASSY OPTICAL SUPPORT | 1 | A7 |
| 8 | 82346-00 | SUPPORT ASSY | 1 | A8 |
| 9 | 95126-00 | CUVETTES PROTECTION ASSY | 1 | A9 |
| 10 | 95121-00 | AUTOSAMPLER PROTECTION | 1 | A10 |
| 11 | 70865-00 | COLUMN SPACER | 3 | A11 |
| 12 | 96812-00 | SELF LUBRIFICATION WASHER | 1 | A12 |
| 13 | 66057-00 | BUSHING I.D. 18 | 1 | A13 |
| 14 | 70866-00 | SPACER L=16.5 | 4 | A14 |
| 15 | 68113-00 | POSITIONING DISK | 1 | A15 |
| 16 | 96813-00 | RUBBER WASHER | 1 | A16 |
| 17 | 66058-00 | BUSHING I.D. 34 | 1 | A17 |
| 18 | 71866-00 | GASKET | 1 | A18 |
| 19 | 68114-00 | BLOCKING DISK | 1 | A19 |
| 20 | 65527-00 | POLYSTYRENE CUP | REF. | S |
| 21 | 71859-00 | CAOUTCHOUC MOUSSE 2x10 | m. 0.175 | S |
| 22 | 90588-11 | C.S.B.H. SCREW M3x10 | 2 | S |
| 23 | 90588-01 | C.S.B.H. SCREW M3x8 | 8 | S |
| 24 | 90661-03 | SOCKET HEAD CAP SCREW M3x8 | 9 | S |
| 25 | 90713-01 | C.S.B.H. SCREW M3x8 BONDERIZED | 1 | S |
| 26 | 90600-04 | C.S.F.H. SCREW M3x10 | 4 | S |
| 27 | 06763-05 | WASHER FLAT I.D. 3.2 | 22 | S |
| 28 | 04764-04 | LOCK WASHER SPLIT I.D. 3.2 | 22 | S |

- THIS DOCUMENT CONTAINS PROPRIETARY INFORMATION OF INSTRUMENTATION LABORATORY SPA (IL). NONE OF WHICH SHALL BE COPIED, DISCLOSED OR USED IN WHOLE OR IN PART FOR ANY PURPOSE WITHOUT WRITTEN PERMISSION OF IL. THIS DOCUMENT IS SUBJECT TO RECALL BY IL AT ANY TIME -

Instrumentation Laboratory

AUTOSAMPLER ASSY

70244-00

2

• THIS DOCUMENT CONTAINS PROPRIETARY INFORMATION OF INSTRUMENTATION LABORATORY SPA (IL). NONE OF WHICH SHALL BE COPIED, DISCLOSED OR USED IN WHOLE OR IN PART FOR ANY PURPOSE WITHOUT WRITTEN PERMISSION OF IL. THIS DOCUMENT IS SUBJECT TO RECALL BY IL AT ANY TIME •

| ITEM | CODE | DESCRIPTION | Qty | | | NOTES |
|---|---|---|---|---|---|---|
| 1 | 99840-00 | Chamber atomizing lower | 1 | | | |
| 2 | 65714-00 | Drain | 1 | S | | |
| 3 | 65844-00 | Atomizer Threaded rod | 2 | | | |
| 4 | 64282-06 | Grip | 2 | S | | |
| 5 | 66928-00 | Air holder filter capillary | 1 | | X | |
| 6 | 84776-00 | Sample orifice assy | 1 | | X | |
| 7 | | | | | | |
| 8 | 66054-00 | Bushing assy | 1 | | X | |
| 9 | | | | | | |
| 10 | | | | | | |
| 11 | 66929-00 | Air holder capillary | 1 | | X | |
| 12 | 56044-08 | SPR shim 1/4 x 1/2 x 1/32 brass | 1 | S | | |
| 13 | 99046-00 | Tube gas assy | 1 | | X | |
| 14 | 64252-03 | O-ring buna N 1/16 Øi 1/16 sez. | 1 | S | | |
| 15 | 64252-10 | O-ring buna N 1/4 Øi 1/16 sez. | 1 | S | | |
| 16 | 64251-02 | O-ring buna N 3/64 Øi 3/64 sez. | 1 | S | | |
| 17 | 64252-29 | O-ring buna N 1" 1/2 Øi 1.16 sez. | 1 | S | | |
| 18 | 56897-00 | Adhesive "Loctite AV" | A.R. | | S | |
| 19 | 65195-00 | Adhesive Epoxy 101 | A.R. | | S | |

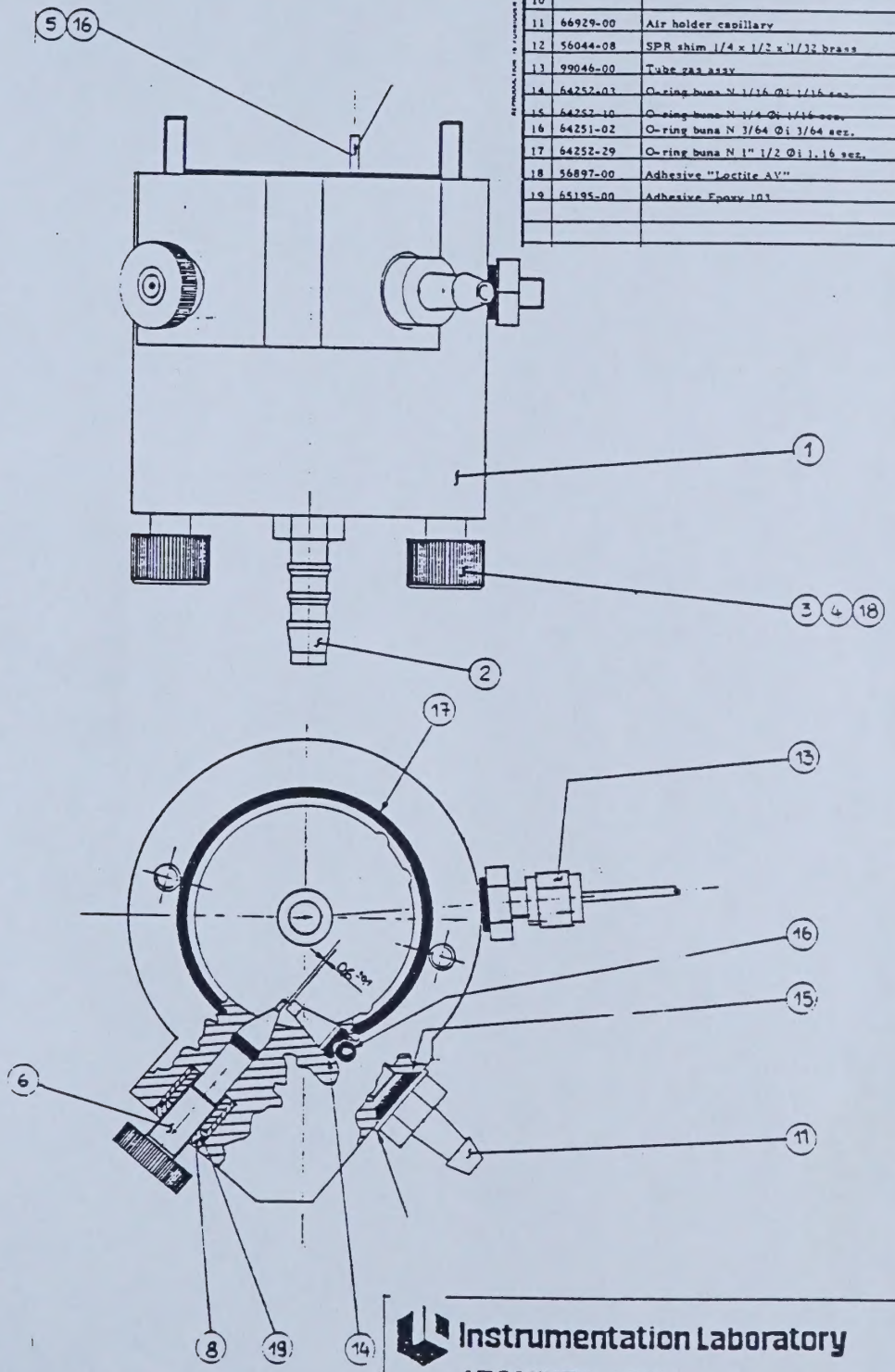


Instrumentation Laboratory

ATOMIZER ASSY

98730-02

3

| ITEM | CODE | DESCRIPTION | Qty | Assy |
|---|---|---|---|---|
| 1 | 71048-00 | PLATE ATOMIZING CHAMBER | 1 | 3 |
| 2 | 22109-00 | TUBE AIR | 1 | 2 |
| 3 | 22112-00 | ROD TIRE | 2 | 4 |
| 4 | 22119-00 | SPACER | 2 | 2 |
| 5 | 65122-00 | ASSY CHIMNEY MOUNTING RING | 1 | 2 1 |
| 6 | 24463-00 | ASSY BURNER HEAD | 1 | 3 1 |
| 7 | 99839-00 | CHAMBER ATOMIZING UPPER | 1 | 4 |
| 8 | 56415-00 | EXTENSION SPRING | 1 | 5 |
| 9 | 66200-10 | WASHER FLAT 6 5/32 x 3/8 | 2 | 5 |
| 10 | 66219-10 | LOCK WASHER SPLIT 6 5/32x3/8 | 2 | 5 |
| 11 | 66252-18 | O-RING BUNA N I.D. 3/6x1/6 V | 1 | 5 |
| 12 | 66280-14 | NUT HEX 6-32 | 2 | 5 |

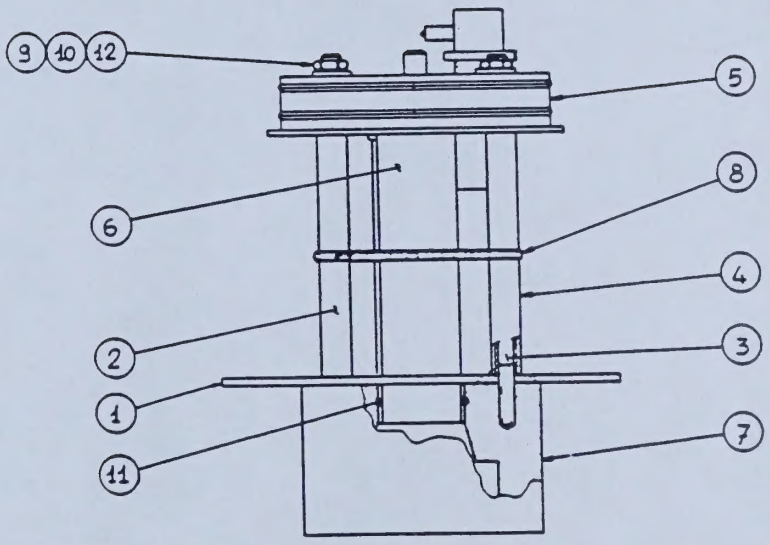


- THIS DOCUMENT CONTAINS PHOPRIETARY INFORMATION OF INSTRUMENTATION LABORATORY SPA. IEL NONE OF WHICH SHALL BE COPIED, DISCLOSED OR USED IN WHOLE OR IN PART FOR ANY PURPOSE WITHOUT WRITTEN PERMISSION OF IL THIS DOCUMENT IS SUBJECT TO RECALL BY IL AT ANY TIME -

**Instrumentation Laboratory**

**BURNER ASSY**

98730-01

**4**

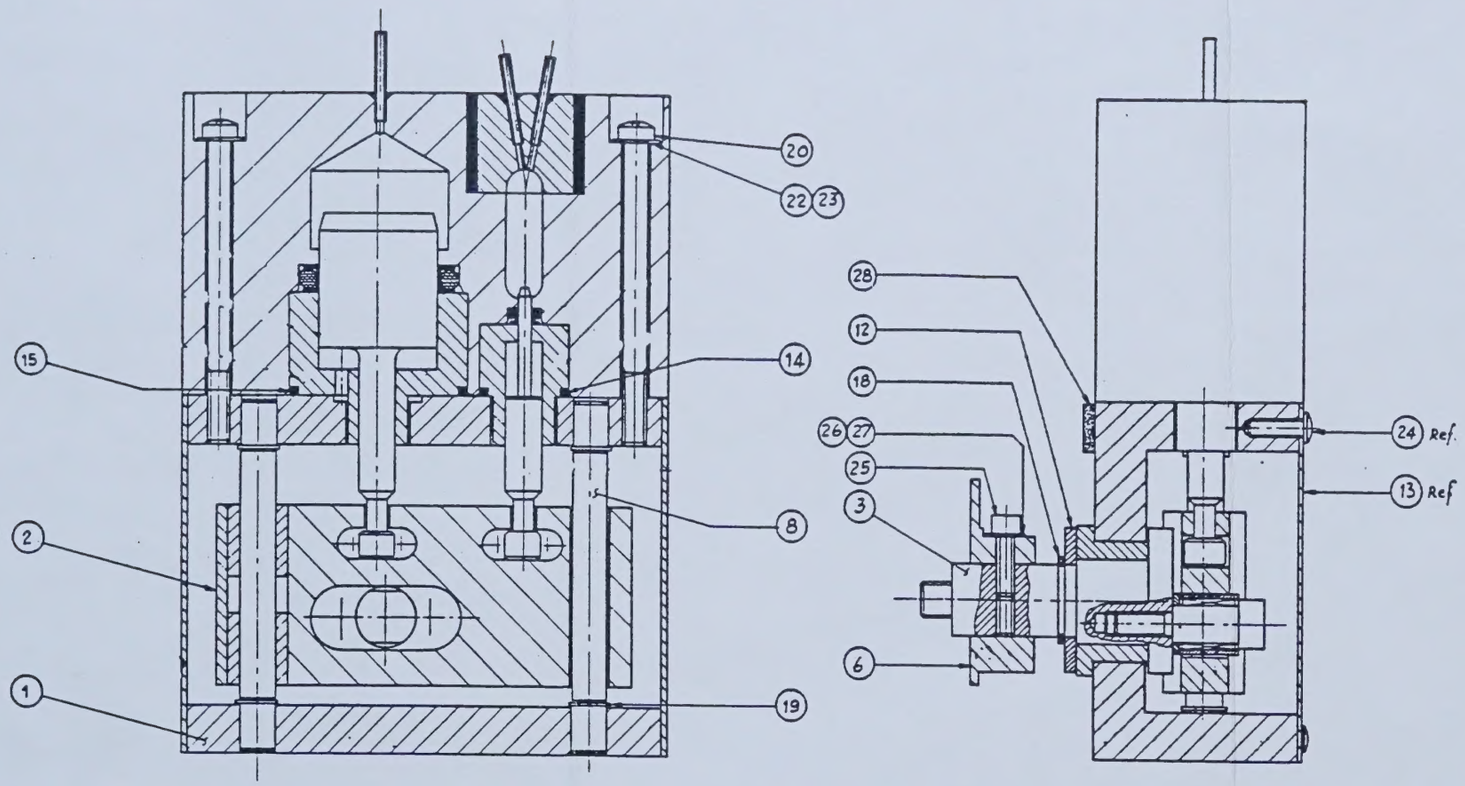


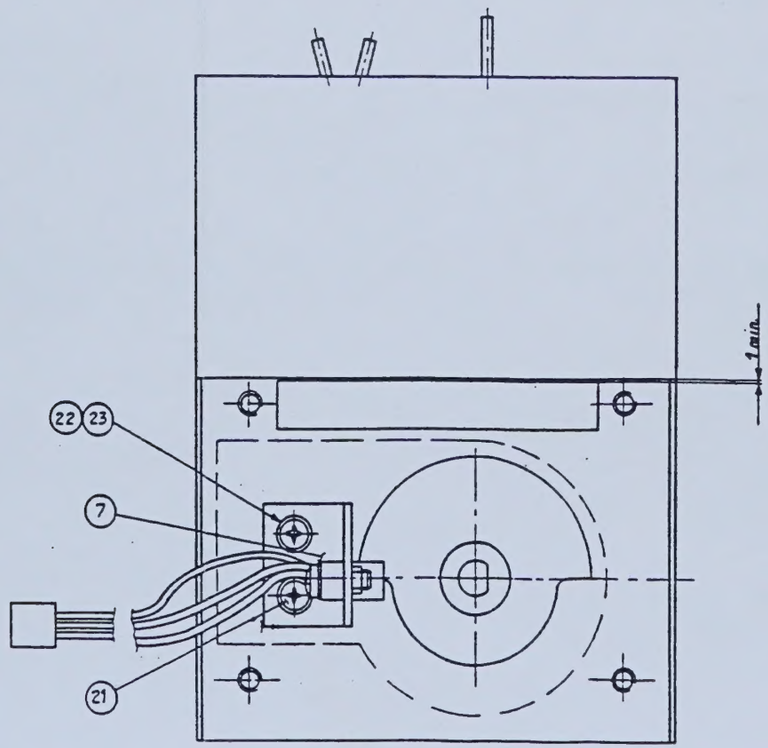


| | | | | |
|---|---|---|---|---|
| 1 | 85325-00 | SUPPORT DILUTOR ASSY | 1 | A1X |
| 2 | 68554-00 | CAM ASSY | 1 | A1X |
| 3 | 65202-00 | SHAFT ASSY | 1 | A1X |
| 4 | | | | |
| 5 | | | | |
| 6 | 68555-00 | CAM | 1 | A1 |
| 7 | 70903-00 | OPTICAL SWITCH ASSY | 1 | A1X |
| 8 | 97758-00 | PIN | 2 | A1 |
| 9 | | | | |
| 10 | | | | |
| 11 | | | | |
| 12 | 96803-00 | WASHER I.D. 12,1 | 1 | A1 |
| 13 | 67845-00 | COVER | 1 | A1 |
| 14 | 95240-57 | O-RING 114 | 1 | S |
| 15 | 95240-23 | O-RING 2106 | 1 | S |
| 16 | | | | |
| 17 | | | | |
| 18 | 65330-10 | SEEGER (RING FOR SHAFT Ø12) | 1 | S |
| 19 | 05333-06 | SEEGER (RING FOR SHAFT TYPE RS 4) | 4 | S |
| 20 | 99498-15 | PAN HEAD SCREW M4x20 | 2 | S |
| 21 | 99580-01 | C.S.B. HEAD SCREW M4x6 | 2 | S |
| 22 | 96764-06 | LOCK WASHER SPLIT I.D. 4,2 | 4 | S |
| 23 | 96763-07 | WASHER FLAT I.D. 4,3 | 4 | S |
| 24 | 99665-02 | SOCKET BUTTON HEAD CAP SCREW M3x6 | 2 | S |
| 25 | 99681-03 | SOCKET HEAD CAP SCREW M3x8 | 1 | S |
| 26 | 96764-04 | LOCK WASHER SPLIT I.D. 3,2 | 1 | S |
| 27 | 96763-05 | WASHER FLAT I.D. 3,2 | 1 | S |
| 28 | | | | |

• THIS DOCUMENT CONTAINS PROPRIETARY INFORMATION OF INSTRUMENTATION LABORATORY SPA (IL). NONE OF WHICH SHALL BE COPIED, DISCLOSED OR USED IN WHOLE OR IN PART FOR ANY PURPOSE WITHOUT WRITTEN PERMISSION OF IL. THIS DOCUMENT IS SUBJECT TO RECALL BY IL AT ANY TIME •

Instrumentation Laboratory
DILUTOR ASSY
95675-00

| ITEM | CODE | DESCRIPTION | Q'ty |
|---|---|---|---|
| 1 | 82328-00 | MOTOR SUPPORT | 1 |
| 2 | 95040-01 | DILUTOR MOTOR ASSY | 1 |
| 3 | 94753-05 | WASHER FLAT I.D. 1.2 | 1 |
| 4 | 94764-04 | LOCK WASHER SPLIT I.D. 1.2 | 1 |
| 5 | 99588-03 | C.S.H. HEAD SCREW M3x6 | 1 |

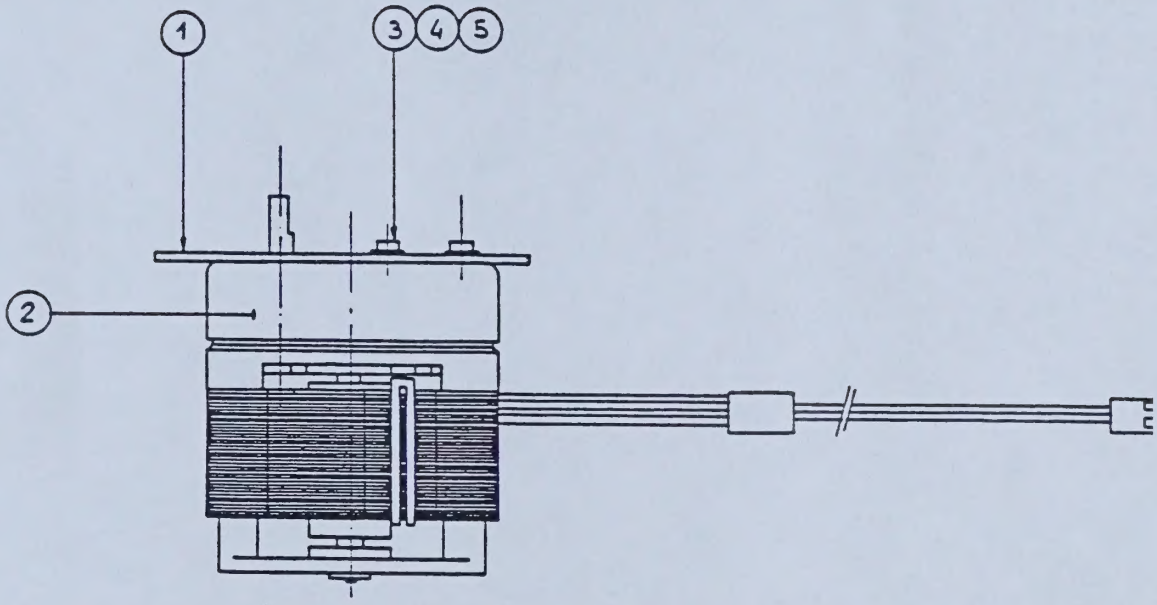


• THIS DOCUMENT CONTAINS PROPRIETARY INFORMATION OF INSTRUMENTATION LABORATORY SPA (IL). NONE OF WHICH SHALL BE COPIED, DISCLOSED OR USED IN WHOLE OR IN PART FOR ANY PURPOSE WITHOUT WRITTEN PERMISSION OF IL. THIS DOCUMENT IS SUBJECT TO RECALL BY IL AT ANY TIME •

Instrumentation Laboratory

DILUTOR MOTOR ASSY

95040-00

6

| ITEM | CODE | DESCRIPTION | Qty |
|---|---|---|---|
| 1 | 95126-00 | MOTOR SUPPORT | 1 |
| 2 | 95040-01 | DILUTOR MOTOR ASSY | 1 |
| 3 | 96763-05 | WASHER FLAT I.D. 1.2 | 1 |
| 4 | 96764-04 | LOCK WASHER SPLIT I.D. 1.2 | 1 |
| 5 | 99588-03 | C.S.H. HEAD SCREW M1.2x6 | 1 |

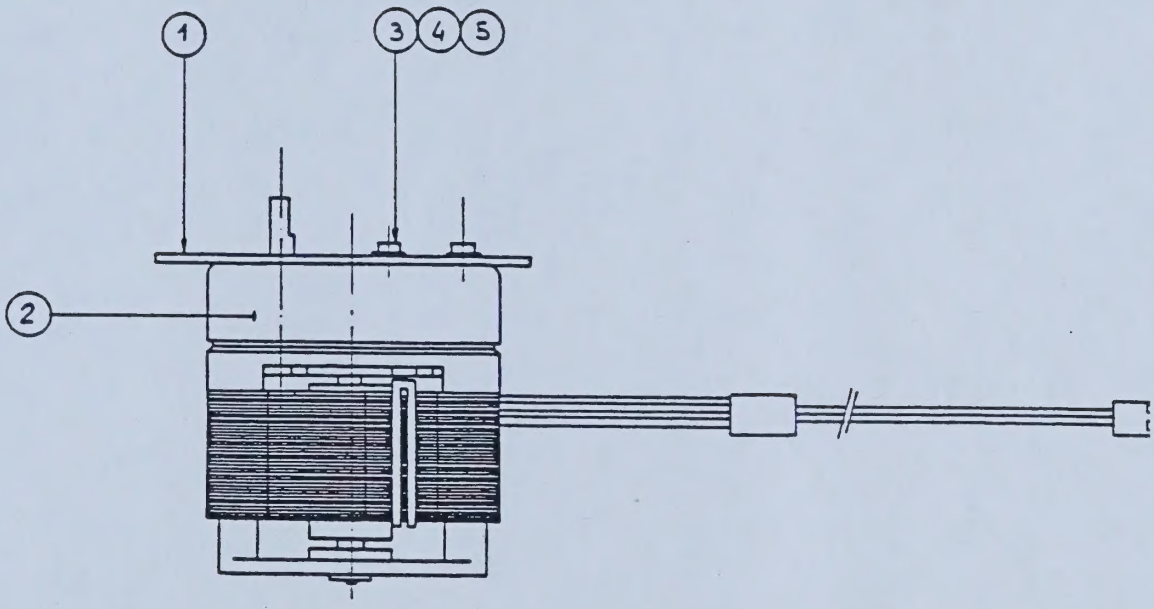


- THIS DOCUMENT CONTAINS PROPRIETARY INFORMATION OF INSTRUMENTATION LABORATORY SPA (IL). NONE OF WHICH SHALL BE COPIED, DISCLOSED OR USED IN WHOLE OR IN PART FOR ANY PURPOSE WITHOUT WRITTEN PERMISSION OF IL. THIS DOCUMENT IS SUBJECT TO RECALL BY IL AT ANY TIME -

Instrumentation Laboratory

DILUTOR MOTOR ASSY

95040-00

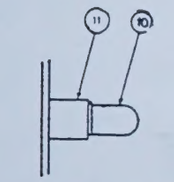


Section A-A : LED assembly

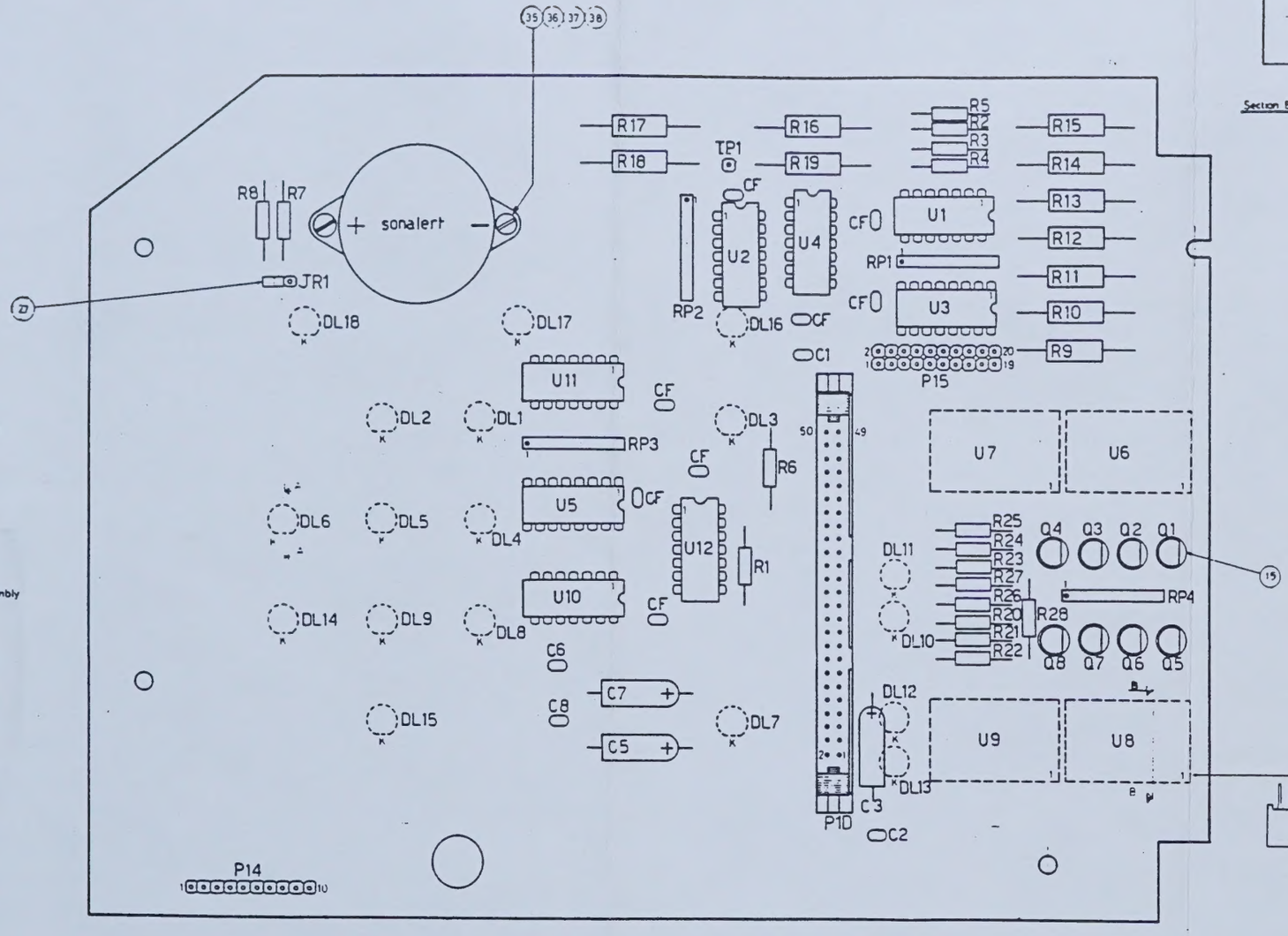


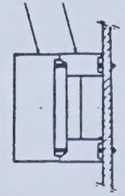

Section B-B : MAN 6610 assembly

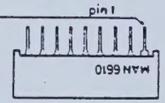


| ITEM | CODE | DESCRIPTION | Qty | I/A | NOTES |
|---|---|---|---|---|---|
| 1 | 71157 - 03 | Fabrication board display | 1 | A2 | |
| 2 | | | | | |
| 3 | 71720 - 00 | Integrated circuit 74LS164 | 2 | S | U3-2 |
| 4 | 98795 - 00 | " " L 203 | 2 | S | U3-4 |
| 5 | 73620 - 00 | " " 74LS138 | 1 | S | U5 |
| 6 | 71716 - 00 | " " MAN 6610 | 4 | S | U6-7-8-9 |
| 7 | 74435 - 00 | " " 7407 | 3 | S | U10-11-12 |
| 8 | 95710 - 03 | Solder socket 42 pin | 2 | S | |
| 9 | 98791 - 00 | Transistor MPSA55 | 8 | S | Q1 to Q8 |
| 10 | 68265 - 01 | Red LED not diffused narrow angle | 18 | S | DL1 to DL18 |
| 11 | 70858 - 00 | Led spacer | 18 | A4 | |
| 12 | 57331 - 01 | Tantalum capacitor 15µF 20V | 3 | S | C3-5-7 |
| 13 | 67327 - 02 | Ceramic capacitor 0,1 µF 50V | 12 | S | C1-2-6-8-CF |
| 14 | | | | | |
| 15 | 57356 - 02 | Transistor pad TO18 | 8 | S | |
| 16 | 96390 - 04 | Resistor 330Ω 1W 5% | 11 | S | R9 to R19 |
| 17 | 96388 - 33 | " 470Ω 1/4 W 5% | 8 | S | R20 to R27 |
| 18 | 96388 - 37 | " 1KΩ " " | 2 | S | R6-28 |
| 19 | 96388 - 41 | " 2,2KΩ " " | 2 | S | R2-3 |
| 20 | 96388 - 49 | " 10KΩ " " | 3 | S | R1-4-5 |
| 21 | 96388 - 53 | " 22KΩ " " | 2 | S | R7-8 |
| 22 | 96444 - 01 | S I P resistor 7 x 1KΩ | 1 | S | RP4 |
| 23 | 96444 - 03 | " " 7 x 10KΩ | 3 | S | RP1-2-3 |
| 24 | | | | | |
| 25 | | | | | |
| 26 | | | | | |
| 27 | 70289 - 00 | Mini jumper | 1 | S | JR1 |
| 28 | 73618 - 01 | Berg male connector 1 pin | 1 | S | TP1 |
| 29 | 73618 - 03 | " " " 3 pin | 1 | S | JR1 |
| 30 | 73618 - 10 | " " " 10 pin | 3 | S | P14 - P15 |
| 31 | 70328 - 00 | Header stright 50 pin | 1 | S | P01 |
| 32 | | | | | |
| 33 | 99823 - 00 | Sonalert | 1 | S | |
| 34 | | | | | |
| 35 | 99496 - 05 | Pan head screw M2x0,4 L10mm | 2 | S | |
| 36 | 68060 - 02 | Hex. nut M2x0,4 | 2 | S | |
| 37 | 96766 - 01 | Int lock washer i d 2,2 | 2 | S | |
| 38 | 96763 - 02 | Flat washer i d 2,2 | 2 | S | |
| | | | | | |
| | | | | | |
| | | | | | |
| | | | | | |
| | 82078 - 00 | Display board schematic | REF | A1 | |
| | | Display board test procedure | REF | | |
| | | Display board Q.A procedure | REF | | |

NOTE

THE COMPONENTS INDICATED BY A DASHED LINE MUST BE ASSEMBLED ON THE OPPOSITE SIDE OF THE CIRCUIT

- THIS DOCUMENT CONTAINS PHOPRIETARY INFORMATION OF INSTRUMENTATION LABORATORY SPA (IL) NONE OF WHICH SHALL BE COPIED DISCLOSED OR USED IN WHOLE OR IN PART FOR ANY PURPOSE WITHOUT WRITTEN PERMISSION OF IL THIS DOCUMENT IS SUBJECT TO RECALL BY IL AT ANY TIME -

Instrumentation Laboratory

DISPLAY BOARD ASSY

84979-00

7

PRELIMINARY

# MOSTEK

## 1K x 8 STATIC RAM

# MK4118(P/J/N) Series

### FEATURES

- Address Activated™ Interface combines benefits of Edge Activated™ and fully static operation
- High performance

| Part Number | Access Time | Cycle Time |
|---|---|---|
| MK4118-1 | 120 nsec | 120 nsec |
| MK4118-2 | 150 nsec | 150 nsec |
| MK4118-3 | 200 nsec | 200 nsec |
| MK4118-4 | 250 nsec | 250 nsec |

- Single +5 volt power supply
- TTL compatible I/O
  Fanout: 2 - Standard TTL
  2 - Schottky TTL
  12 - Low power Schottky TTL
- Low Power - 400mw Active
- $\overline{CE}$, $\overline{OE}$, and $\overline{LATCH}$ functions for flexible system operation
- Pin compatible with Mostek's BYTEWYDE™ memory family

### DESCRIPTION

The MK4118 uses Mostek's Poly R N-Channel Silicon Gate process and advanced circuit design techniques to package 8192 bits of static RAM on a single chip. Mostek's Address Activated™ circuit design technique is utilized to achieve high performance, low power, and easy user implementation. The device has a $V_{IH}$ = 2.2, $V_{IL}$ = 0.8V, $V_{OH}$ = 2.4, $V_{OL}$ = 0.4V making it totally compatible with all TTL family devices.

The MK4118 is designed for all wide word memory applications. The MK4118 provides the user with a high-density, cost-effective 1K x 8-bit Random Access Memory. Fast Output Enable ($\overline{OE}$) and Chip Enable ($\overline{CE}$) controls are provided for easy interface in microprocessor or other bus-oriented systems. The MK4118 features a flexible Latch ($\overline{L}$) function to permit latching of the address and $\overline{CE}$ status at the user's option. Common data and address bus operation may be performed at the system level by utilizing the $\overline{L}$ and $\overline{OE}$ functions for the MK4118. The latch function may be bypassed by merely tying the latch pin to $V_{CC}$, providing fast ripple-through operation.

STATIC RAMS

### BLOCK DIAGRAM

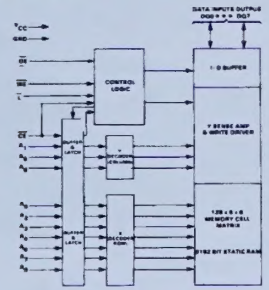

### PIN CONNECTIONS

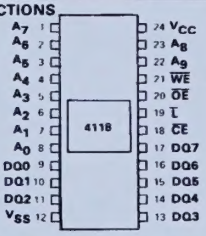


### PIN NAMES

| | | | |
|---|---|---|---|
| A0-A9 | Address Inputs | $\overline{WE}$ | Write Enable |
| $\overline{CE}$ | Chip Enable | $\overline{OE}$ | Output Enable |
| $V_{SS}$ | Ground | $\overline{L}$ | Latch |
| $V_{CC}$ | Power (+5V) | $DQ_0$ - $DQ_7$ | Data In/ Data Out |



### ABSOLUTE MAXIMUM RATINGS*

Voltage on any pin relative to $V_{SS}$ ..... -0.5V to +7.0V
Operating Temperature $T_A$ (Ambient) ..... 0°C to +70°C
Storage Temperature (Ambient) (Ceramic) ..... -65°C to +150°C
Storage Temperature (Ambient) (Plastic) ..... -55°C to +125°C
Power Dissipation ..... 1 Watt
Short Circuit Output Current ..... 20mA

*Stresses greater than those listed under "Absolute Maximum Ratings" may cause permanent damage to the device. This is a stress rating only and functional operation of the device at these or any other conditions above those indicated in the operational sections of this specification is not implied. Exposure to absolute maximum rating conditions for extended periods may affect reliability.

### RECOMMENDED DC OPERATING CONDITIONS[3]

(0°C ≤ $T_A$ ≤ +70°C)

| SYM | PARAMETER | MIN | TYP | MAX | UNITS | NOTES |
|---|---|---|---|---|---|---|
| $V_{CC}$ | Supply Voltage | 4.75 | 5.0 | 5.25 | V | 1 |
| $V_{SS}$ | Supply Voltage | 0 | 0 | 0 | V | 1 |
| $V_{IH}$ | Logic "1" Voltage All Inputs | 2.2 | | 7.0 | V | 1 |
| $V_{IL}$ | Logic "0" Voltage All Inputs | -0.3 | | 0.8 | V | 1 |

### DC ELECTRICAL CHARACTERISTICS[1,3]

(0°C ≤ $T_A$ ≤ +70°C) ($V_{CC}$ = 5.0 volts ± 5%)

| SYM | PARAMETER | MIN | MAX | UNITS | NOTES |
|---|---|---|---|---|---|
| $I_{CC1}$ | Average $V_{CC}$ Power Supply Current (Active) | | 80 | mA | 7 |
| $I_{CC2}$ | Average $V_{CC}$ Power Supply Current (Standby) | | 60 | mA | 5 |
| $I_{IL}$ | Input Leakage Current (Any Input) | -10 | 10 | µA | 2 |
| $I_{OL}$ | Output Leakage Current | -10 | 10 | µA | 2 |
| $V_{OH}$ | Output Logic "1" Voltage $I_{OUT}$ = -1mA | 2.4 | | V | |
| $V_{OL}$ | Output Logic "0" Voltage $I_{OUT}$ = 4mA | | 0.4 | V | |

### AC ELECTRICAL CHARACTERISTICS[1,3]

(0°C ≤ $T_A$ ≤ +70°C) ($V_{CC}$ = +5.0 volts ± 5%)

| SYM | PARAMETER | TYP | MAX | NOTES |
|---|---|---|---|---|
| $C_I$ | Capacitance on all pins except I/O | 4pF | | 4 |
| $C_{I/O}$ | Capacitance on I/O pins | 10pF | | 4 |

NOTES:
1. All voltages reference to $V_{SS}$.
2. Measured with 0 ≤ $V_I$ ≤ 5V and outputs deselected ($V_{CC}$ = 5V).
3. A minimum of 2msec time delay is required after application of $V_{CC}$ (+5V) before proper device operation can be achieved.
4. Effective capacitance calculated from the equation $C = I \frac{\Delta t}{\Delta V}$ with $\Delta V$ = 3V and $V_{CC}$ nominal.
5. Standby mode is defined as condition with addresses, latch and $\overline{WE}$ remain unchanged.
6. AC timing measurements made with 2 TTL loads plus 100pF.
7. $I_{CC}$ active measured with outputs open.

**ELECTRICAL CHARACTERISTICS**[a]
($0°C \le T_A \le 70°C$ and $V_{CC}$ = 5.0 volts ± 5%)

| | | MK4118-1 | | MK4118-2 | | MK4118-3 | | MK4118-4 | | | |
|---|---|---|---|---|---|---|---|---|---|---|---|
| SYM | PARAMETER | MIN | MAX | MIN | MAX | MIN | MAX | MIN | MAX | UNIT | NOTE |
| $t_{RC}$ | Read Cycle Time | 120 | | 150 | | 200 | | 250 | | ns | |
| $t_{AA}$ | Address Access Time | | 120 | | 150 | | 200 | | 250 | ns | |
| $t_{CEA}$ | Chip Enable Access Time | | 60 | | 75 | | 100 | | 125 | ns | |
| $t_{CEZ}$ | Chip Enable Data Off Time | 0 | 60 | 0 | 75 | 0 | 100 | 0 | 125 | ns | |
| $t_{OEA}$ | Output Enable Access Time | | 60 | | 75 | | 100 | | 125 | ns | |
| $t_{OEZ}$ | Output Enable Data Off Time | 0 | 60 | 0 | 75 | 0 | 100 | 0 | 125 | ns | |
| $t_{AZ}$ | Address Data Off Time | 10 | | 10 | | 10 | | 10 | | ns | |
| $t_{ASL}$ | Address to Latch Setup Time | 10 | | 10 | | 10 | | 20 | | ns | |
| $t_{AHL}$ | Address From Latch Hold Time | 40 | | 50 | | 65 | | 80 | | ns | |
| $t_{CEL}$ | $\overline{CE}$ to Latch Setup Time | 0 | | 0 | | 0 | | 0 | | ns | |
| $t_{CHL}$ | $\overline{CE}$ From Latch Hold Time | 40 | | 50 | | 65 | | 80 | | ns | |
| $t_{LA}$ | Latch Off Access Time | | 155 | | 200 | | 260 | | 320 | ns | |
| $t_{WC}$ | Write Cycle Time | 120 | | 150 | | 200 | | 250 | | ns | |
| $t_{ASW}$ | Address To Write Setup Time | 0 | | 0 | | 0 | | 0 | | ns | |
| $t_{AHW}$ | Address From Write Hold Time | 40 | | 50 | | 65 | | 80 | | ns | |
| $t_{CEW}$ | $\overline{CE}$ To Write Setup Time | 0 | | 0 | | 0 | | 0 | | ns | |
| $t_{CHW}$ | $\overline{CE}$ From Write Hold Time | 40 | | 50 | | 65 | | 80 | | ns | |
| $t_{DSW}$ | Data To Write Setup Time | 20 | | 30 | | 40 | | 50 | | ns | |
| $t_{DHW}$ | Data From Write Hold Time | 20 | | 30 | | 40 | | 50 | | ns | |
| $t_{WD}$ | Write Pulse Duration | 35 | | 50 | | 60 | | 70 | | ns | |
| $t_{LDH}$ | Latch Duration, High | 35 | DC | 50 | DC | 60 | DC | 70 | DC | ns | |
| $t_{LDL}$ | Latch Duration, Low | | DC | | DC | | DC | | DC | ns | |
| $t_{WEZ}$ | Write Enable Data Off Time | 0 | 60 | 0 | 75 | 0 | 100 | 0 | 125 | ns | |
| $t_{LZ}$ | Latch Data Off Time | 10 | | 10 | | 10 | | 10 | | ns | |
| $t_{WPL}$ | Write Pulse Lead Time | 75 | | 90 | | 130 | | 170 | | ns | |





**STATIC READ CYCLE**
$\overline{WE}$ = $\overline{L}$ = HIGH

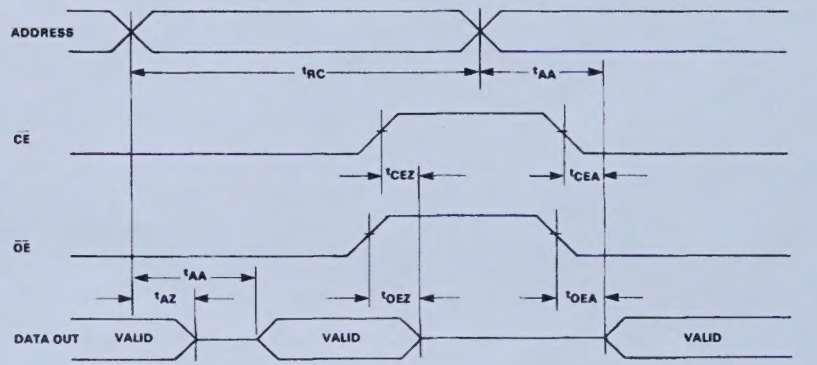


**LATCHED READ CYCLE**
$\overline{WE}$ = HIGH

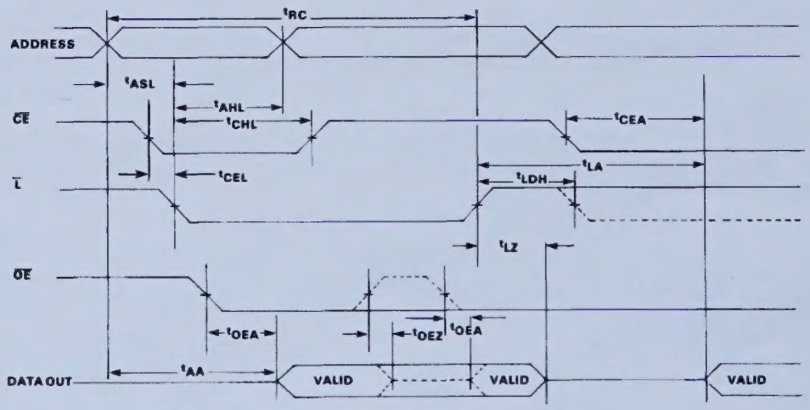

**WRITE CYCLE**
$\overline{OE}$ = LOW, $\overline{L}$ = HIGH

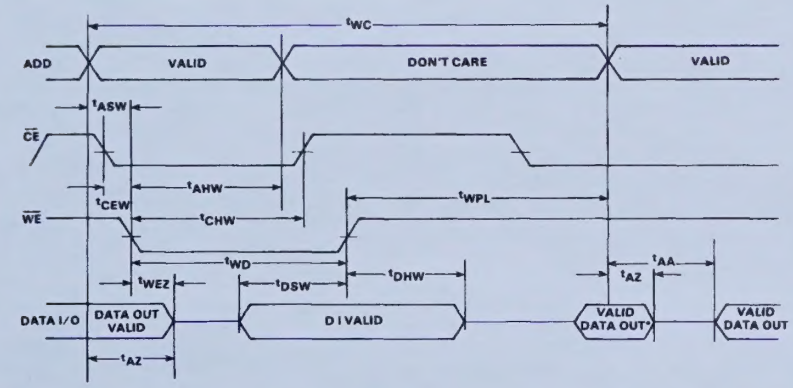


## OPERATION

### READ MODE

The MK4118 is in the READ MODE whenever the Write Enable control input ($\overline{WE}$) is in the high state. The state of the 8 data I/O signals is controlled by the Chip Enable ($\overline{CE}$) and Output Enable ($\overline{OE}$) control signals. The READ MODE memory cycle may be either STATIC (ripple-through) or LATCHED, depending on user control of the Latch Input Signal ($\overline{L}$).

### STATIC READ CYCLE

In the STATIC READ CYCLE mode of operation, the MK4118 provides a fast address ripple-through access of data from 8 of 8192 locations in the static storage array. Thus, the unique address specified by the 10 Address Inputs (An) define which 1 of 1024 bytes of data is to be accessed. The STATIC READ CYCLE is defined by $\overline{WE}$ = $\overline{L}$ = High.

A transition on any of the 10 address inputs will disable the 8 Data Output Drivers after $t_{AZ}$. Valid Data will be available to the 8 Data Output Drivers with $t_{AA}$ after all address input signals are stable, and the data will be output under control of the Chip Enable ($\overline{CE}$) and Output Enable ($\overline{OE}$) signals.

### LATCHED READ CYCLE

The LATCHED READ CYCLE is also defined by the Write Enable control input ($\overline{WE}$) being in the high state, and it is synchronized by proper control of the Latch ($\overline{L}$) input.

As the Latch control input ($\overline{L}$) is taken low, Address (An) and Chip Enable ($\overline{CE}$) inputs that are stable for the specified set-up and hold times are latched internally. Data out corresponding to the latched address will be supplied to the Data Output drivers. The output drivers will be enabled to drive the Output Data Bus under control of the Output Enable ($\overline{OE}$) and latched Chip Enable ($\overline{CE}$) inputs.

Taking the latch input high begins another read cycle for the memory locations specified by the address then appearing on the Address Input (An). Returned the latch control to the low state latches the new Address and Chip Enable inputs internally for the remainder of the LATCHED READ CYCLE.

NOTE: If the 'LATCH' function is not used pin 19 ($\overline{L}$) must be tied high ($V_{IH}$ min).

### WRITE MODE

The MK4118 is in the WRITE MODE whenever the Write Enable ($\overline{WE}$) and Chip Enable ($\overline{CE}$) control inputs are in the low state. The status of the 8 output buffers during a write cycle is explained below.





### WRITE MODE (Cont'd)

The WRITE cycle is initiated by the $\overline{WE}$ pulse going low provided that $\overline{CE}$ is also low. The leading edge of the $\overline{WE}$ pulse is used to latch the status of the address bus. $\overline{CE}$ if active (Low) will also be latched. NOTE: $\overline{WE}$ is gated by $\overline{CE}$. If $\overline{CE}$ goes low after $\overline{WE}$, the Write Cycle will be initiated by $\overline{CE}$, and all timing will be referenced to that edge. $\overline{CE}$ and the Addresses will then be latched, and the cycle must be terminated by $\overline{WE}$ going high. The output bus if not already disabled will go to the high Z state $t_{WEZ}$ after $\overline{WE}$. The latch signal, if at a logic high, will have no impact on the WRITE cycle. If latch is brought from a logic high to low prior to $\overline{WE}$ going active then the address inputs and $\overline{CE}$ will be latched. NOTE: The Latch control ($\overline{L}$) will latch $\overline{CE}$ independent of the state, whereas $\overline{WE}$ will latch $\overline{CE}$ only when in the low state. Once latched, $\overline{CE}$ and the address inputs may be removed after the required hold times have been met.

Data in must be valid $t_{DSW}$ prior to the low-to-high transition of $\overline{WE}$. The Data in lines must remain stable for $t_{DHW}$ after $\overline{WE}$ goes inactive. The write control of the MK4118 disables the data out buffers during the write cycle; however, output enable ($\overline{OE}$) should be used to disable the data out buffers to prevent bus contention between the input data and data that would be output upon completion of the write cycle.

From:
**Rexim LLC**
PO Box 104
Watertown , MA 02471
United States

Ship to:
**Betty Chan U of T Teaching Labs**
1 King's College Cir, MSB, 3382
Toronto , ON M5S1A8
Canada

## Invoice / Packing Slip

| | | Order # | Date | Record # |
|---|---|---|---|---|
| | | 07-04188-63968 | Nov-25-2019 | 17034 |
| **Quantity** | **Item #** | **Item Name** | **Price** | **Subtotal** |
| 1 | 323942186622 | 2pcs bulb for Osram Sylvania 54123 64606 64607 Richmond Elmo VP-A Dual EFM lamp | $14.98 | $14.98 |

| | |
|---|---|
| Subtotal: | $14.98 |
| Shipping & Handling (USPS First Class Mail International / First Class Package International Service): | $11.99 |
| Sales Tax | N/A |
| Seller discounts (-) or charges (+): | $0.00 |
| **Total:** | **$26.97** |

1. ALL RESISTORS ARE 1/4W 5% UNLESS OTHERWISE SPECIFIED

2. RP : RESISTORS ARRAY

3. U10, U11, U12 : I C 7407

4.

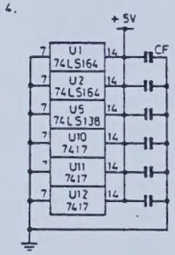


CF = n° 8 CERAMIC CAPACITORS 0,1µF 50V

5. HIGHEST REFERENCE DESIGNATIONS

R28 C7 - U12 - Q8 DL18

6. SPARE RP2 pin 2-3
RP3 pin 8

- THIS DOCUMENT CONTAINS PROPRIETARY INFORMATION OF INSTRUMENTATION LABORATORY SPA (IL) NONE OF WHICH SHALL BE COPIED, DISCLOSED OR USED IN WHOLE OR IN PART FOR ANY PURPOSE WITHOUT WRITTEN PERMISSION OF IL. THIS DOCUMENT IS SUBJECT TO RECALL BY IL AT ANY TIME -

Instrumentation Laboratory

DISPLAY BOARD SCHEMATIC

82078-00

| ITEM | CODE | DESCRIPTION | QTY | |
|---|---|---|---|---|
| 1 | 82436-00 | BRACKET ASSY | 1 | S |
| 2 | 56648 | PHOTOCELL CRYSTAL | 1 | S |
| 3 | 66426 | TEFLON INSULATED PIN | 2 | S |
| 4 | 64492 | NUT TEFLON TURNING 14 | AS REQ | S |

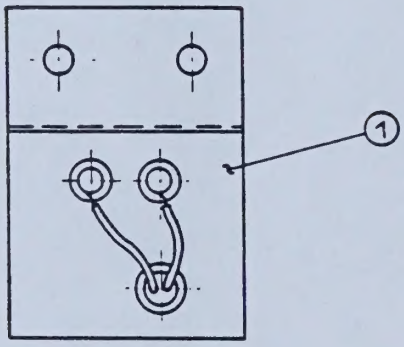


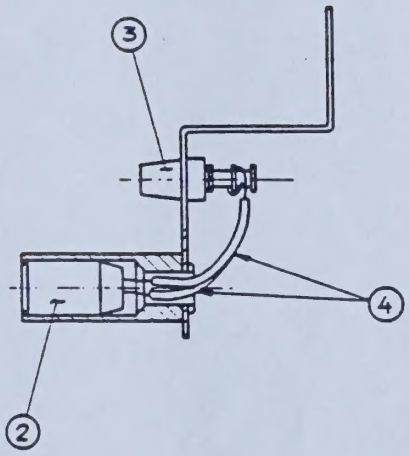


- THIS DOCUMENT CONTAINS PROPRIETARY INFORMATION OF INSTRUMENTATION LABORATORY SPA (IL). NONE OF WHICH SHALL BE COPIED, DISCLOSED OR USED IN WHOLE OR IN PART FOR ANY PURPOSE WITHOUT WRITTEN PERMISSION OF IL. THIS DOCUMENT IS SUBJECT TO RECALL BY IL AT ANY TIME -.

Instrumentation Laboratory

FLAME INDICATOR ASSY

98928-00

9

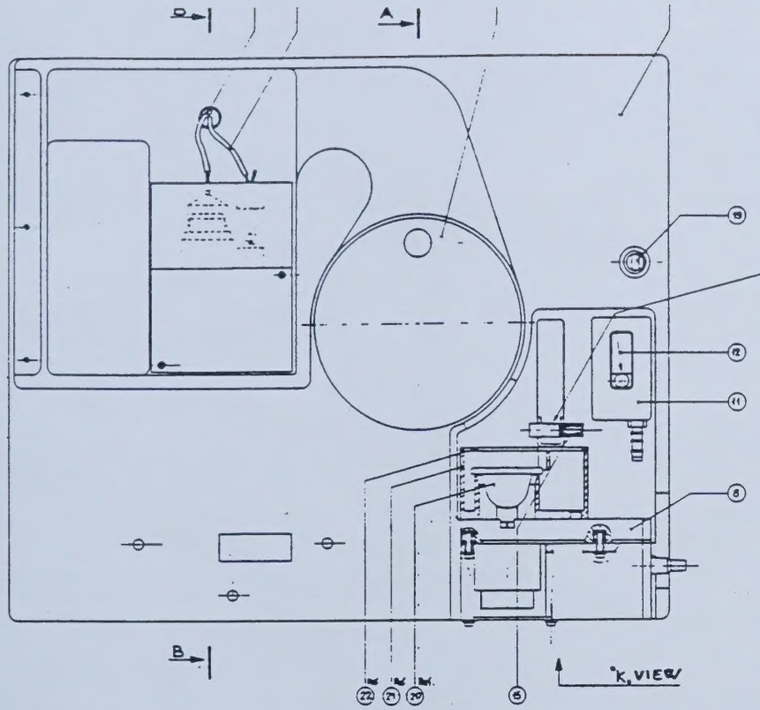


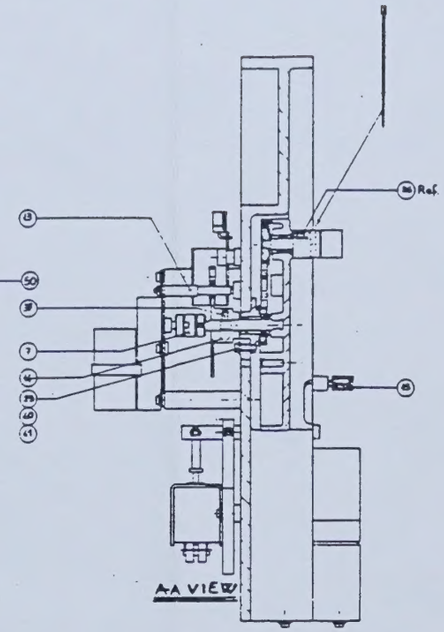


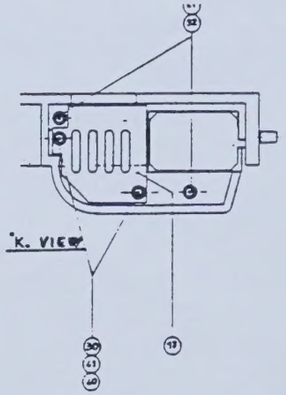


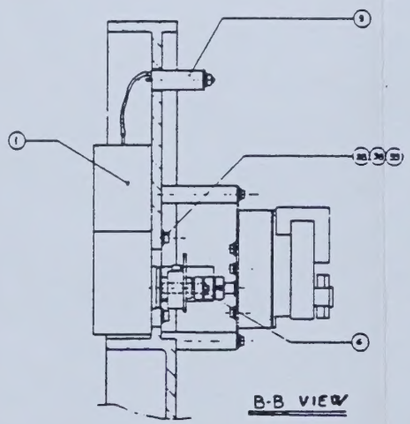


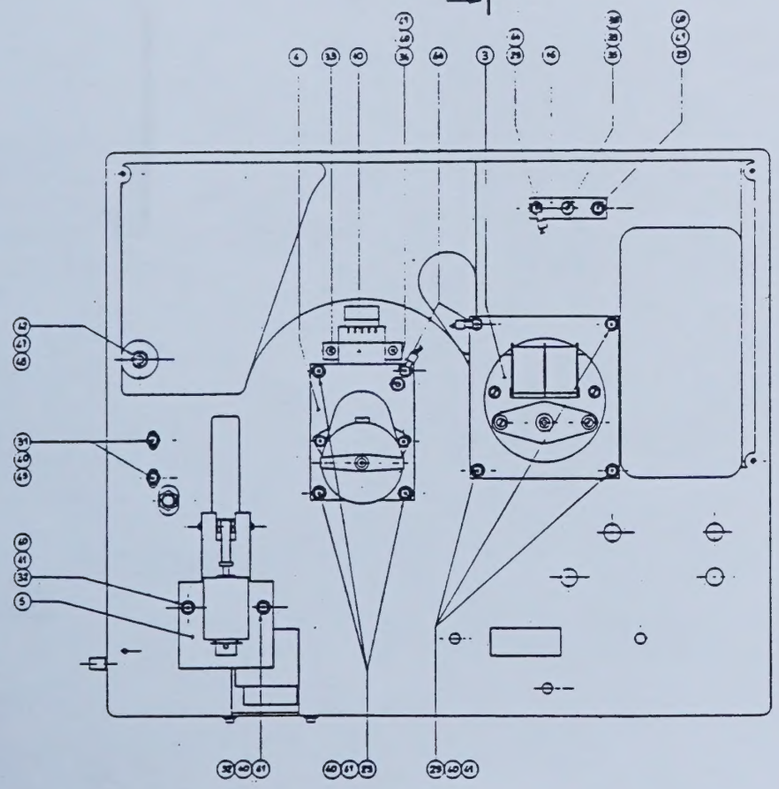

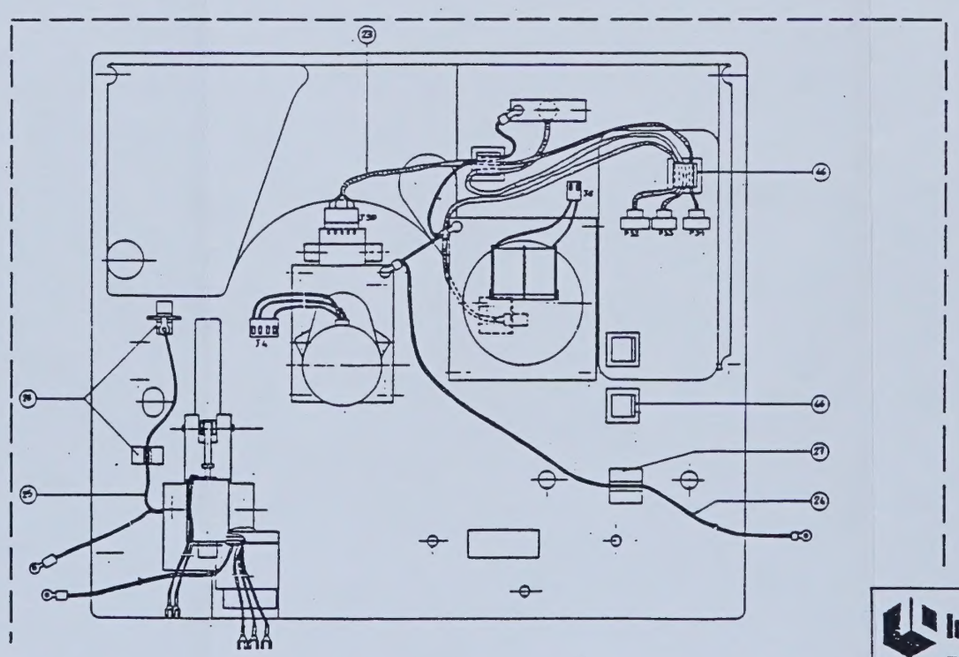

| | | | | | | |
|---|---|---|---|---|---|---|
| 1 | 95675-00 | DILUTOR ASSY | 1 | A | X | ES-11510-40 |
| 2 | 65184-00 | TIP ASSY | 1 | A | X | ES-11510-30 |
| 3 | 95040-00 | DILUTOR MOTOR MTG. ASSY | 1 | A | X | ES-11510-74 |
| 4 | 95041-00 | TIP MOTOR MTG. ASSY | 1 | A | X | ES-11510-16 |
| 5 | 82204-00 | PROBE ELECTROMAGNET ASSY | 1 | A | X | ES-11509-54 |
| 6 | 65706-00 | DILUTOR COUPLING FLEX ASSY | 1 | A | X | |
| 7 | 65719-00 | TIP COUPLING FLEX ASSY | 1 | A | X | ES-11510-26 |
| 8 | 95676-00 | TANK DRAIN MOUNTING ASSY | 1 | A | X | ES-11523-07 |
| 9 | 82774-00 | ELECTROVALVE ASSY | 1 | A | X | |
| 10 | 82311-00 | OPTICAL SWITCH SUPPORT ASSY | 1 | A | X | |
| 11 | 95677-00 | DRAIN ATOMIZER ASSY | 1 | A | X | ES-11512-08 |
| 12 | 82326-00 | SUPPORT NEEDLE ASSY | 1 | A | X | ES-11512-05 |
| 13 | 97757-00 | STOP PIN | 1 | A | | ES-11510-22 |
| 14 | 68553-00 | CAM | 1 | A | | ES-11510-21 |
| 15 | 71560-00 | KNOB ASSY | 2 | A | X | ES-11512-01 |
| 16 | 82474-00 | BRACKET ELECTROVALVE | 1 | A | | ES-11523-65 |
| 17 | 82475-00 | BRACKET | 1 | A | | ES-11525-60 |
| 18 | 82320-00 | FLUIDIC SUPPORT | 1 | A | | |
| 19 | 97460-00 | THREADED MAGNET | 1 | S | | |
| 20 | 67087-00 | SPINNING CUP | REF. | A | | ES-11523-66 |
| 21 | 67086-00 | CUVETTE DRAIN | REF. | A | | |
| 22 | 67086-01 | CUVETTE DRAIN COVER | Ref. | A | | |
| 23 | 71991-06 | ASSY CABLE TIP OPTICAL SWITCH | 1 | A | X | |
| 24 | 71993-00 | GND CBLE I° - 943 | 1 | A | X | |
| 25 | | | | | | |
| 26 | 60002-00 | SELF ADHESIVE CLIP MODIFIED | 2 | A | X | ES-11525-80 |
| 27 | 00082-01 | SELF ADHESIVE CLIP KKU-2 | 1 | S | | |
| 28 | 00580-04 | C.S.B.H. SCREW M4x12 | 4 | S | | |
| 29 | 00588-04 | C.S.B.H. SCREW M3x10 | 13 | S | | |
| 30 | 00588-03 | C.S.B.H. SCREW M3x8 | 2 | S | | |
| 31 | 00588-12 | C.S.B.H. SCREW M3x35 | 2 | S | | |
| 32 | 00588-05 | C.S.B.H. SCREW M3x12 | 4 | S | | |
| 33 | 00600-03 | C.S.F.H. SCREW M3x8 | 2 | S | | |
| 34 | 68060-05 | HEXAGONAL NUT M3x0.5 | 1 | S | | |
| 35 | 68036-00 | HEXAGONAL NUT 6-32 UNC | 1 | S | | |
| 36 | 00667-02 | SOCKET SET SCREW CUP POINT M4x6 | REF. | S | | |
| 37 | 00635-02 | SOCKET SET SCREW CUP POINT BURNISHED M3x6 | 2 | S | | |
| 38 | 00761-06 | LOCK WASHER SPLIT I.D. 4,3 | 5 | S | | |
| 39 | 00763-07 | WASHER FLAT I.D. 4,1 | 5 | S | | |
| 40 | 00761-04 | LOCK WASHER SPLIT I.D. 3,2 | 19 | S | | |
| 41 | 00763-05 | WASHER FLAT I.D. 3,2 | 20 | S | | |
| 42 | 68060-07 | HEXAGONAL NUT M5 | 1 | S | | |
| 43 | 73289-01 | URETHANE TUBING ID. .040 OD. .100 | 0,10 | S | | |
| a43 | | CUT IN LENGHT L=0,055 | 1 | S | | |
| b43 | | CUT IN LENGHT L=0,045 | 1 | S | | |
| 44 | 00766-03 | WASHER EXTERNAL LOCK I.D. 3,2 | 3 | S | | |
| 45 | 00801-05 | WASHER FLAT I.D. 3,2 O.D. 7 | 2 | S | | |
| 46 | 66004-00 | SELF ADHESIVE CLIP | 4 | S | | |
| 47 | 00761-09 | WASHER FLAT I.D. 5,3 | 1 | S | | |
| 48 | 00764-08 | LOCK WASHER SPLIT I.D. 5,1 | 1 | S | | |
| 49 | 97134-00 | SAMPLE PROBE NEEDLE ASSY | 1 | | | |
| 50 | 97135-00 | TIP NEEDLE ASSY | 1 | | | |

- THIS DOCUMENT CONTAINS PROPRIETARY INFORMATION OF INSTRUMENTATION LABORATORY SPA (IL). NONE OF WHICH SHALL BE COPIED. DISCLOSED OR USED IN WHOLE OR IN PART FOR ANY PURPOSE WITHOUT WRITTEN PERMISSION OF IL. THIS DOCUMENT IS SUBJECT TO RECALL BY IL AT ANY TIME -

NOTES:
PUT A WASHER FLAT FOR EVERY EXTERNAL LOCK WASHER :
MOUN INTO HEAD SCREW AND EXTERNAL LOCK WASHER

Instrumentation Laboratory
FLUIDIC PANEL ASSY
82936-00

10

| | | | | | | |
|---|---|---|---|---|---|---|
| 1 | 82936-00 | UPPER FRONT PANEL | 1 | G | | |
| 2 | 82932-00 | DEAD LITE PANEL ASSY | 1 | A | I | ES-11523-43 |
| 3 | 67846-00 | PRINTER COVER AND PANEL ASSY | 1 | A | I | ES-11523-42 |
| 4 | 82338-00 | PRINTER SUPPORT ASSY | 1 | A | I | ES-11523-36 |
| 5 | 84979-00 | DISPLAY BOARD ASSY | 1 | C | I | ES-11509-06 |
| 6 | 71503-00 | PAPER WAY PANEL ASSY | 1 | A | I | ES-11523-48 |
| 7 | 71504-00 | PAPER WAY ASSY | 1 | A | I | ES-11523-38 |
| 8 | 82339-00 | SUPPORT | 1 | A | | ES-11525-77 |
| 9 | 97460-00 | THREADED MAGNET | 1 | B | | |
| 10 | 65165-00 | EPOXY 103 ADHESIVE | A.R. | B | | |
| 11 | 68060-05 | EX. HOT M3x0,5 | 4 | B | | |
| 12 | 99588-02 | CR.S.HE. SCREW M3x0,5 L=6 | 10 | B | | |
| 13 | 96769-05 | WASHER FLAT I.D. 3,2 | 16 | B | | |
| 14 | 96764-04 | LOCK WASHER SPLIT I.D. 3,2 | 16 | B | | |
| 15 | 99584-01 | BUTTON HEAD SOCKET SCREW M3 L=6 | 5 | B | | |
| 16 | 99683-08 | SOCKET HEAD CAP SCREW M3 L=6 | 2 | B | | |

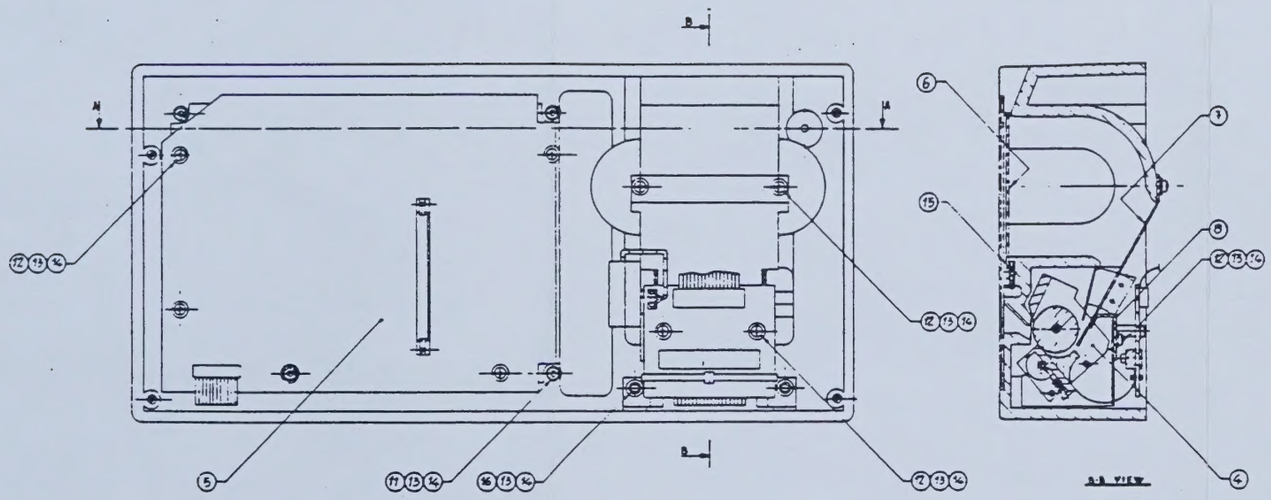

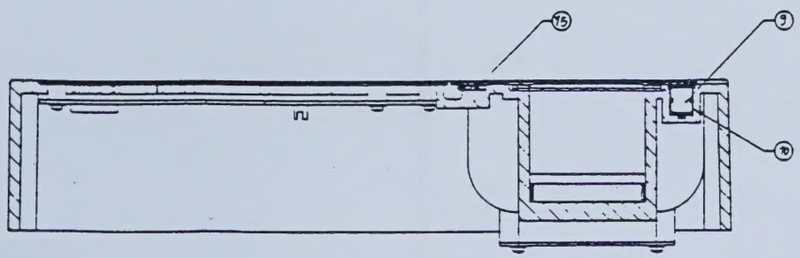

- THIS DOCUMENT CONTAINS PROPRIETARY INFORMATION OF INSTRUMENTATION LABORATORY SPA (IL). NONE OF WHICH SHALL BE COPIED, DISCLOSED OR USED IN WHOLE OR IN PART FOR ANY PURPOSE WITHOUT WRITTEN PERMISSION OF IL. THIS DOCUMENT IS SUBJECT TO RECALL BY IL AT ANY TIME -

Instrumentation Laboratory

FRONT PRINT PANEL ASSY

82937-00

11

| | | | | | | |
|---|---|---|---|---|---|---|
| 2 | 65711-00 | TEE | 1 | S | | |
| 3 | 96186-00 | REDUCING | 1 | S | | |
| 4 | 96317-01 | REGULATOR AIR (0-5) | 1 | S | | |
| 5 | 57350-00 | NIPPLE | 1 | S | | |
| 6 | 82775-09 | SOLENOID VALVE | 1 | S | | |
| 7 | 56198-00 | REDUCING NIPPLE | 1 | S | | |
| 8 | 65712-00 | ELBOW | 1 | S | | |
| 9 | 70767-00 | FILTER WITHOUT JEWEL ASSY | 1 | A S | I | |
| 10 | 65713-00 | TEE CROSS | 1 | S | | |
| 11 | 67059-00 | PRESSURE SWITCH | 1 | A S | I | |
| 12 | 70768-00 | FILTER WITH JEWEL ASSY | 1 | A S | I | |
| 13 | 56898-00 | LOCTITE 542 IDRAULERMETIC | A.R. | S | | |

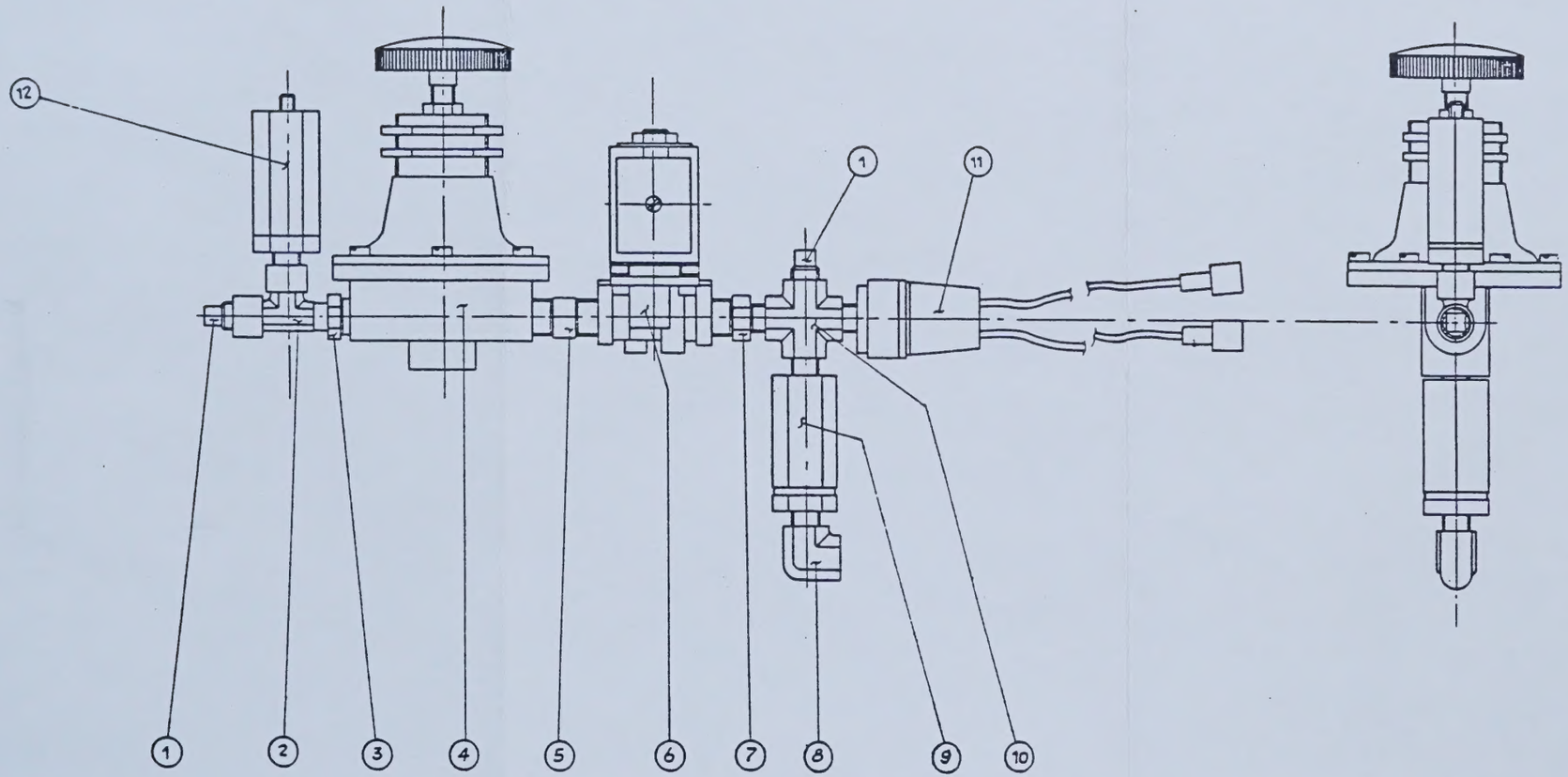


NOTE: ALL ITEMS MUST BE ASSEMBLED BE BY LOCTITE 542 IDRAULERMETIC. (item 13)

• THIS DOCUMENT CONTAINS PROPRIETARY INFORMATION OF INSTRUMENTATION LABORATORY SPA (IL). NONE OF WHICH SHALL BE COPIED, DISCLOSED OR USED IN WHOLE OR IN PART FOR ANY PURPOSE WITHOUT WRITTEN PERMISSION OF IL. THIS DOCUMENT IS SUBJECT TO RECALL BY IL AT ANY TIME •

Instrumentation Laboratory
GAS PLUMBING ASSY
65718-00

12

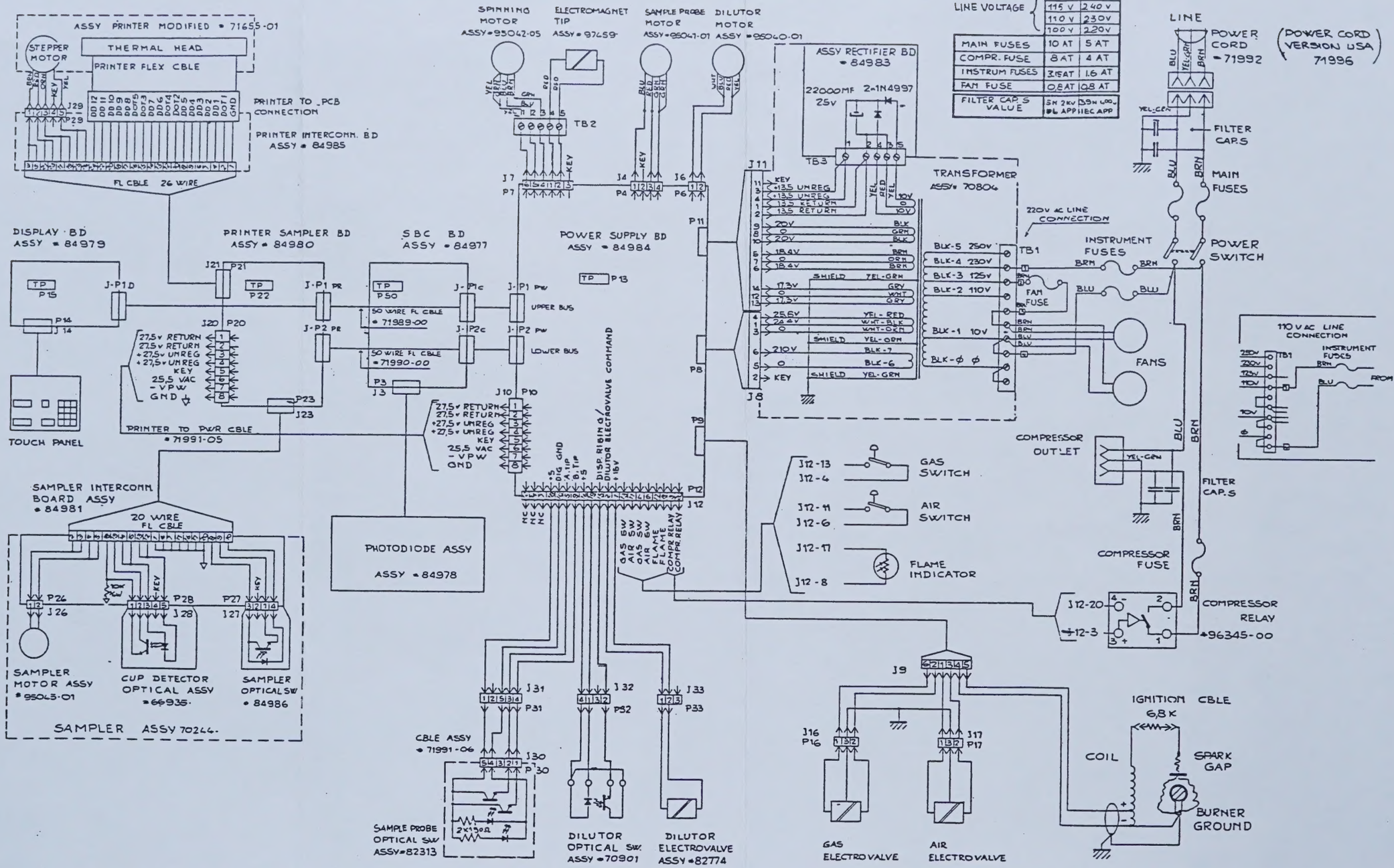


-THIS DOCUMENT CONTAINS PROPRIETARY INFORMATION OF INSTRUMENTATION LABORATORY SPA (IL). NONE OF WHICH SHALL BE COPIED, DISCLOSED OR USED IN WHOLE OR IN PART FOR ANY PURPOSE WITHOUT WRITTEN PERMISSION OF IL. THIS DOCUMENT IS SUBJECT TO RECALL BY IL AT ANY TIME-.

Instrumentation Laboratory

GENERAL INTERCONNECTION DIAGRAM

82081-00

13

## UPPER 50 PIN BUS J1 TABLE

| | | | |
|---|---|---|---|
| 50. | DGT GND. | 49. | SL0/ |
| 48. | SL1/ | 47. | DGT GND |
| 46. | SL2/ | 45. | SL3/ |
| 44. | DGT GND | 43. | ROW 0/ |
| 42. | ROW 1 / | 41. | DGT GND |
| 40. | ROW 2 / | 39. | ROW 3/ |
| 38. | DGT GND | 37. | NOT USED |
| 36. | COL 7/ | 35. | COL 6/ |
| 34. | DGT GND | 33. | COL 5/ |
| 32. | COL 4/ | 31. | COL 3/ |
| 30. | DGT GND | 29. | COL 2/ |
| 28. | COL 1/ | 27. | COL 0/ |
| 26. | DGT GND | 25. | TxD |
| 24. | DGT GND | 23. | RxD |
| 22. | DGT GND | 21. | INIT/ |
| 20. | DGT GND | 19. | LED GND |
| 18. | LED GND | 17. | LED GND |
| 16. | LED GND | 15. | LED GND |
| 14. | FREE | 13. | + 15 V DGT |
| 12. | + 15 V DGT | 11. | - 15 V DGT |
| 10. | + 15 V DGT | 9. | FREE |
| 8. | + 5 V DGT | 7. | + 5 V DGT |
| 6. | + 5 V DGT | 5. | + 5 V DGT |
| 4. | + 5 V DGT | 3. | + 5 V DGT |
| 2. | + 5 V DGT | 1. | + 5 V DGT |

## P50 TEST POINT S.B.C. BOARD TABLE

| | | | |
|---|---|---|---|
| 1° | D6 | 14° | A3 |
| 2° | D5 | 15° | A13 |
| 3° | D3 | 16° | A5 |
| 4° | D4 | 17° | A12 |
| 5° | D7 | 18° | A7 |
| 6° | D2 | 19° | A11 |
| 7° | D0 | 20° | A0 |
| 8° | D1 | 21° | A10 |
| 9° | WR/ | 22° | A2 |
| 10° | RD/ | 23° | A9 |
| 11 | A15 | 24° | A4 |
| 12° | A1 | 25° | A8 |
| 13° | A14 | 26° | A6 |

## P22 TEST POINT PRINTER SAMPLER BOARD TABLE

| | | | |
|---|---|---|---|
| 1. | DOT - ON | 14. | N.C. |
| 2. | ICØ DISB. | 15. | + 15 V PRINT |
| 3. | 1st WND M5 HIGH | 16. | DGT GND |
| 4. | 2nd WND M3 HIGH | 17. | N.C. |
| 5. | 2nd WND M2 | 18. | DETECTOR CK DISB/ |
| 6. | ALARM RESET/ | 19. | DOT FAILURE / |
| 7. | 1st WND M1 | 20. | PLATE POSITIONED |
| 8. | CUP SIGNAL | 21. | 2nd WND M3 |
| 9. | RECEIVER SIGNAL | 22. | ROW 3 |
| 10. | TRANSMITTER DRIVER | 23. | 1st WND M5 |
| 11. | CUP PRESENCE | 24. | DOT TIME/ |
| 12. | SAMPLER MOTOR DISB/ | 25. | 1st WND M1 HIGH |
| 13. | RECEIVER OFFSET | 26. | 2nd WND M2 HIGH |

## LOWER 50 PIN BUS J2 TABLE

| | | | |
|---|---|---|---|
| 50. | DGT GND | 49. | ALE/ |
| 48. | DGT GND | 47. | IS7/ |
| 46. | IS6/ | 45. | IS5/ |
| 44. | DGT GND | 43. | IS4/ |
| 42. | IS3/ | 41. | IS2/ |
| 40. | DGT GND | 39. | MEM W/ |
| 38. | DGT GND | 37. | MEM R/ |
| 36. | DGT GND | 35. | A2 |
| 34. | DGT GND | 33. | A1 |
| 32. | DGT GND | 31. | A0 |
| 30. | DGT GND | 29. | d7 |
| 28. | d6 | 27. | d5 |
| 26. | DGT GND | 25. | d4 |
| 24. | d3 | 23. | d2 |
| 22. | DGT GND | 21. | d1 |
| 20. | d0 | 19. | FREE |
| 18. | ANA. GND | 17. | ANALOG INPUT |
| 16. | ANA. GND | 15. | NOT USED |
| 14. | ANA. GND | 13. | 0 CROSS SIGN/ |
| 12. | ANA. GND | 11. | MOTOR SAMPLER ENABLE |
| 10. | ANA. GND | 9. | + 15 V ANA. |
| 8. | + 15 V ANA. | 7. | + 15 V ANA. |
| 6. | + 15 V ANA. | 5. | - 15 V ANA. |
| 4. | - 15 V ANA. | 3. | - 15 V ANA. |
| 2. | - 15 V ANA. | 1. | ANA. GND |

## P13 TEST POINT POWER SUPPLY BOARD TABLE

| | | | |
|---|---|---|---|
| 1. | Diluter motor CMD/ | 14. | Right probe motor CMD/ |
| 2. | CCW spin motor CMD/ | 15. | + 25 V UNREG. |
| 3. | Gas electrovalve CMD/ | 16. | U16 outputs disb. |
| 4. | CW spin motor CMD/ | 17. | - 25 V unreg. |
| 5. | Ignit | 18. | Dilutor electrovalve CMD/ |
| 6. | Solenoid tip CMD/ | 19. | Init/ |
| 7. | + 15 V DGT | 20. | Row 0 / |
| 8. | Air electrovalve CMD/ | 21. | 0 crossing signal/ |
| 9. | - 15 V ANA. | 22. | Row 1/ |
| 10. | Ignition | 23. | DGT GND |
| 11. | + 15 V ANA. | 24. | A probe signal |
| 12. | Left probe motor CMD/ | 25. | Dilutor rising |
| 13. | + 5.1 V DGT | 26. | CMN GND |

## P15 TEST POINT DISPLAY BOARD TABLE

| | | | |
|---|---|---|---|
| 1. | Segment | 11. | Driver 5 |
| 2. | Segment | 12. | Segment E |
| 3. | R.I./ | 13. | Driver 3 |
| 4. | Segment | 14. | Segment D |
| 5. | Driver 6 | 15. | Driver 2 |
| 6. | D.P. | 16. | Segment C |
| 7. | Driver 7 | 17. | Driver 1 |
| 8. | Segment G | 18. | Segment B |
| 9. | Driver 4 | 19. | Driver 0 |
| 10. | Segment F | 20. | Segment A |

## SBC BOARD CONNECTOR P1C TABLE

| | | | | | | |
|---|---|---|---|---|---|---|
| Power S. bd | DGT GND | 50 | 49 | SL0/ | Printer Sampler bd, Display bd | |
| Display bd, Printer Sampler bd | SL1/ | 48 | 47 | DGT GND | Power S. bd | |
| Display bd | SL2/ | 46 | 45 | SL3/ | Display bd | |
| Power S. bd | DGT GND | 44 | 43 | POL KEY | | |
| | | 42 | 41 | DGT GND | Power S. bd | |
| | | 40 | 39 | | | |
| Power S. bd | DGT GND | 38 | 37 | | | |
| Printer Sampler bd, Power S. bd | COL 7/ | 36 | 35 | COL 6/ | Power S. bd, Printer Sampler bd | |
| Power S. bd | DGT GND | 34 | 33 | COL 5/ | Power S. bd, Printer Sampler bd | |
| Display bd | COL 4/ | 32 | 31 | COL 3/ | Display bd | |
| Power S. bd | DGT GND | 30 | 29 | COL 2/ | Display bd | |
| Display bd | COL 1/ | 28 | 27 | COL 0/ | Display bd | |
| | DGT GND | 26 | 25 | TxD | Display bd | |
| Power S. bd | DGT GND | 24 | 23 | RxD | Display bd | |
| | DGT GND | 22 | 21 | INIT/ | Power S. bd | |
| | DGT GND | 20 | 19 | | | |
| | | 18 | 17 | | | |
| | | 16 | 15 | | | |
| | | 14 | 13 | | | |
| | | 12 | 11 | | | |
| | | 10 | 9 | | | |
| | +5V DGT | 8 | 7 | +5V DGT | | |
| Power S. bd | +5V DGT | 6 | 5 | +5V DGT | Power S. bd | |
| | +5V DGT | 4 | 3 | +5V DGT | | |
| | +5V DGT | 2 | 1 | +5V DGT | | |

## SBC BOARD CONNECTOR P2C TABLE

| | | | | | | |
|---|---|---|---|---|---|---|
| | DGT GND | 50 | 49 | ALE/ | | |
| Power S. bd | DGT GND | 48 | 47 | IS 7/ | Power S. bd | |
| Power S. bd | IS 6/ | 46 | 45 | IS 5/ | | |
| Power S. bd | DGT GND | 44 | 43 | IS 4/ | Printer Sampler bd | |
| Printer Sampler bd | IS 3/ | 42 | 41 | IS 2/ | | |
| | DGT GND | 40 | 39 | MEM W/ | Power S. bd, Printer Sampler bd | |
| Power S. bd | DGT GND | 38 | 37 | MEM R/ | | |
| | DGT GND | 36 | 35 | A2 | | |
| | DGT GND | 34 | 33 | A1 | Printer Sampler bd. | |
| | DGT GND | 32 | 31 | A0 | Printer Sampler bd | |
| | DGT GND | 30 | 29 | D7 | | |
| Printer Sampler bd, Power S. bd | D6 | 28 | 27 | D5 | Power S. bd and | |
| Power S. bd | DGT GND | 26 | 25 | D4 | Printer Sampler bd | |
| Printer Sampler bd, Power S. bd | D3 | 24 | 23 | D2 | | |
| Power S. bd | DGT GND | 22 | 21 | D1 | | |
| Printer Sampler Bd, Power S. bd | D0 | 20 | 19 | FREE | | |
| | AN. GND | 18 | 17 | AN. IN. | | |
| | AN. GND | 16 | 15 | | | |
| Power S. bd | AN. GND | 14 | 13 | R1/ | Power S. bd | |
| | AN. GND | 12 | 11 | POL KEY | | |
| | AN. GND | 10 | 9 | +15V AN | Power S. bd | |
| Power S. bd | +15V AN. | 8 | 7 | +15V IN. | | |
| | +15V AN. | 6 | 5 | -15V AN. | Power S. bd | |
| Power S. bd | -15V AN. | 4 | 3 | -15V IN. | | |
| | -15V AN. | 2 | 1 | AN. GND | Power S. bd | |

## S.B.C. BOARD CONNECTOR P3 TABLE

| | | | | | |
|---|---|---|---|---|---|
| | -15V AN. | 20 | 19 | -15V AN. | |
| Preamplifier Sub-Unit | -15V AN | 18 | 17 | +15V AN. | Preamplifier Sub-Unit |
| | +15V AN. | 16 | 15 | +15V AN. | |
| | POL KEY | 14 | 13 | AN. GND | |
| Preamplifier Sub-Unit | AN. GND | 12 | 11 | AN. IN. | Preamplifier Sub-Unit |
| Preamplifier Sub-Unit | AN. IN. | 10 | 9 | AN. GND | |
| | AN. GND | 8 | 7 | AN. GND | |
| Preamplifier Sub-Unit | SEL 2 | 6 | 5 | AN. GND | Preamplifier Sub-Unit |
| | SEL 1 | 4 | 3 | AN. GND | |
| | SEL 0 | 2 | 1 | AN. GND | |

## POWER SUPPLY BOARD CONNECTOR P1PW TABLE

| | | | | | | |
|---|---|---|---|---|---|---|
| Display bd, Printer S. bd, SBC | DGT GND | 50 | 49 | | | |
| | | 48 | 47 | DGT GND | → | SBC, Printer S. bd, Display bd. |
| | | 46 | 45 | | | |
| Display bd, Printer S. bd, SBC | DGT GND | 44 | 43 | ROW 0/ | ← | Display bd |
| Display bd → | ROW 1 | 42 | 41 | DGT GND | → | SBC, Printer S. bd, Display bd. |
| | | 40 | 39 | | | |
| Display bd, Printer S. bd, SBC | DGT GND | 38 | 37 | | | |
| SBC ← | COL 7/ | 36 | 35 | COL 6/ | → | SBC |
| Display bd, Printer S. bd, SBC | DGT GND | 34 | 33 | COL 5/ | → | SBC |
| | POL KEY | 32 | 31 | | | |
| Display bd, Printer S. bd, SBC | DGT GND | 30 | 29 | | | |
| | | 28 | 27 | | | |
| | DGT GND | 26 | 25 | | | |
| | DGT GND | 24 | 23 | | | |
| Display bd, Printer S. bd, SBC | DGT GND | 22 | 21 | INIT/ | → | SBC, Printer S. bd, Display bd |
| | DGT GND | 20 | 19 | LED GND | | |
| | LED GND | 18 | 17 | LED GND | → | Printer S. bd, Display bd |
| Display bd, Printer S. bd | LED GND | 16 | 15 | LED GND | | |
| | | 14 | 13 | +15V DGT | → | Printer S. bd, Display bd |
| Display bd, Printer S. bd | +15V DGT | 12 | 11 | +15V DGT | | |
| | +15V DGT | 10 | 9 | | | |
| | +5V DGT | 8 | 7 | +5V DGT | | |
| Printer Sampler bd, SBC, Display bd | +5V DGT | 6 | 5 | +5V DGT | | |
| | +5V DGT | 4 | 3 | +5V DGT | → | SBC, Printer S. bd, Display bd. |
| | +5V DGT | 2 | 1 | +5V DGT | | |

## POWER SUPPLY BOARD CONNECTOR P2PW TABLE

| | | | | | | |
|---|---|---|---|---|---|---|
| Printer Sampler bd, S.B.C. | DGT GND | 50 | 49 | | | |
| | DGT GND | 48 | 47 | IS 7/ | ← | S.B.C. |
| S.B.C. → | IS 6/ | 46 | 45 | | | |
| S.B.C., Printer Sampler bd ← | DGT GND | 44 | 43 | | | |
| | POL KEY | 42 | 41 | | | |
| | DGT GND | 40 | 39 | MEMW/ | ← | S.B.C. |
| | DGT GND | 38 | 37 | | | |
| Printer Sampler bd, S.B.C. | DGT GND | 36 | 35 | | | |
| | DGT GND | 34 | 33 | | | |
| | DGT GND | 32 | 31 | | | |
| | DGT GND | 30 | 29 | D 7 | | |
| S.B.C. → | D 6 | 28 | 27 | D 5 | | |
| S.B.C., Printer Sampler bd ← | DGT GND | 26 | 25 | D 4 | ← | S.B.C. |
| S.B.C. → | D 3 | 24 | 23 | D 2 | | |
| S.B.C., Printer Sampler bd ← | DGT GND | 22 | 21 | D 1 | | |
| S.B.C. → | D 0 | 20 | 19 | | | |
| | AN. GND | 18 | 17 | | | |
| | AN. GND | 16 | 15 | | | |
| Printer Sampler bd, S.B.C. | AN. GND | 14 | 13 | 0 Cross. sign./ | → | S.B.C. |
| | AN. GND | 12 | 11 | Motor sampler en. | → | Printer Sampler bd |
| | AN. GND | 10 | 9 | +15V AN. | → | Printer Sampler bd, S.B.C. |
| Printer Sampler bd, S.B.C. | +15V AN. | 8 | 7 | +15V AN. | | |
| | +15V AN. | 6 | 5 | -15V AN. | → | Printer Sampler bd, S.B.C. |
| | -15V AN. | 4 | 3 | -15V AN. | | |
| Printer Sampler bd, S.B.C. | -15V AN. | 2 | 1 | AN. GND | → | Printer Sampler bd, S.B.C. |

## DISPLAY BOARD CONNECTOR P1D TABLE

| | | | | | | |
|---|---|---|---|---|---|---|
| Power S. bd → | DGT GND | 50 | 49 | SL0/ | ← | SBC |
| SBC → | SL1/ | 48 | 47 | DGT GND | ← | Power S. bd |
| SBC → | SL2/ | 46 | 45 | SL3/ | ← | SBC |
| Power S. bd → | DGT GND | 44 | 43 | ROW 0/ | → | Power S. bd |
| Power S. bd ← | ROW 1/ | 42 | 41 | DGT GND | ← | Power S. bd |
| Printer Sampler bd ← | ROW 2/ | 40 | 39 | ROW 3/ | → | Printer Sampler bd |
| Power S. bd → | DGT | 38 | 37 | | | |
| | | 36 | 35 | | | |
| Power S. bd → | DGT GND | 34 | 33 | | | |
| SBC ← | COL 4/ | 32 | 31 | COL 3/ | | |
| Power S. bd → | DGT GND | 30 | 29 | COL 2/ | → | SBC |
| SBC ← | COL 1/ | 28 | 27 | COL 0/ | | |
| Power S. bd → | DGT GND | 26 | 25 | TxD | → | SBC |
| | DGT GND | 24 | 23 | RxD | | |
| | DGT GND | 22 | 21 | INIT/ | → | Power S. bd |
| | DGT GND | 20 | 19 | LED GND | → | Power S. bd |
| Power S. bd → | LED GND | 18 | 17 | LED GND | | |
| | LED GND | 16 | 15 | LED GND | | |
| | | 14 | 13 | +15V DGT | → | Power S. bd |
| Power S. bd → | +15V DGT | 12 | 11 | +15V DGT | | |
| | +15V DGT | 10 | 9 | | | |
| | +5V DGT | 8 | 7 | +5V DGT | | |
| | +5V DGT | 6 | 5 | +5V DGT | | |
| Power S. bd → | +5V DGT | 4 | 3 | +5V DGT | → | Power S. bd |
| | +5V DGT | 2 | 1 | +5V DGT | | |

## POWER SUPPLY BOARD CONNECTOR P8 TABLE

| | | |
|---|---|---|
| 1 | 24 VAC | |
| 2 | POL KEY | |
| 3 | RETURN | |
| 4 | 25, 5 VAC | ← TRANSFORMER |
| 5 | 210 VAC RETURN | |
| 6 | 210 VAC | |

## CONNECTOR P9 TABLE

| | | |
|---|---|---|
| 1 | 24 VAC AIR ELECTROVALVE | → AIR ELECTROVALVE |
| 2 | 24 VAC GAS ELECTROVALVE | → GAS ELECTROVALVE |
| 3 | AIR ELECTROVALVE RETURN | ← AIR ELECTROVALVE |
| 4 | COIL - | → COIL |
| 5 | COIL + | → COIL |
| 6 | GAS ELECTROVALVE RETURN | ← GAS ELECTROVALVE |

## CONNECTOR P11 TABLE

| | | |
|---|---|---|
| 1 | +13, 5V RETURN | |
| 2 | +13, 5V RETURN | ← RECTIFIER BOARD |
| 3 | +13, 5V UNREG. | |
| 4 | +13, 5V UNREG. | |
| 5 | 18, 4 VAC | |
| 6 | 18, 4 VAC | ← TRANSFORMER |
| 7 | RETURN | |
| 8 | RETURN | |
| 9 | 20 VAC | ← TRANSFORMER |
| 10 | 20 VAC | |
| 11 | POL KEY | |
| 12 | RETURN | |
| 13 | 17, 3 VAC | ← TRANSFORMER |
| 14 | 17, 3 VAC | |

## DISPLAY BOARD CONNECTOR P14 TABLE

| | | |
|---|---|---|
| 1 | ROW 4/ | → |
| 2 | ROW 5/ | → |
| 3 | ROW 6/ | → |
| 4 | ROW 7/ | → |
| 5 | POL KEY | → TOUCH PANEL BOARD |
| 6 | COL 0/ | ← |
| 7 | COL 1/ | ← |
| 8 | COL 2/ | ← |
| 9 | COL 3/ | ← |
| 10 | COL 4/ | ← |

## PRINTER SAMPLER BOARD CONNECTOR P21 TABLE

| | | | | | | |
|---|---|---|---|---|---|---|
| Printer Interconnection Board ← | 1st WND MS | 26 | 25 | 1st WND MS | → | Pr. ter Interconnection Board |
| | SS 12/ | 24 | 23 | 2nd WND M2 | | |
| | DD 11/ | 22 | 21 | 2nd WND M2 | | |
| | DD 10/ | 20 | 19 | 2nd WND M3 | | |
| | DD 9/ | 18 | 17 | DD 8/ | | |
| | E5 | 16 | 15 | E3 | | |
| | DD7/ | 14 | 13 | DD 6/ | | |
| | E 4 | 12 | 11 | 2nd WND M3 | | |
| | E 2 | 10 | 9 | DD 4/ | | |
| | DD 5/ | 8 | 7 | DD 2/ | | |
| | DD 3/ | 6 | 5 | 1st WND M1 | | |
| | DD 1/ | 4 | 3 | 1st WND M1 | | |
| | E1 | 2 | 1 | LED GND | | |

## PRINTER SAMPLER BOARD CONNECTOR P1PR TABLE

| | | | | | | |
|---|---|---|---|---|---|---|
| Power S. bd → | DGT GND | 50 | 49 | SL0/ | ← | SBC |
| SBC → | SL1/ | 48 | 47 | DGT GND | ← | Power S. bd |
| Power S. bd → | DGT GND | 44 | 43 | | | |
| | | 42 | 41 | DGT GND | ← | Power S. bd |
| Display bd. → | ROW2/ | 40 | 39 | ROW3/ | ← | Display bd |
| Power S. bd → | DGT GND | 38 | 37 | | | |
| SBC ← | COL7/ | 36 | 35 | COL6/ | → | SBC |
| Power S. bd → | DGT GND | 34 | 33 | COL5/ | → | SBC |
| | | 32 | 31 | | | |
| Power S. bd → | DGT GND | 30 | 29 | | | |
| | POL KEY | 28 | 27 | | | |
| | DGT GND | 26 | 25 | | | |
| | DGT GND | 24 | 23 | | | |
| Power S. bd → | DGT GND | 22 | 21 | INIT/ | ← | Power S. bd |
| | DGT GND | 20 | 19 | LED GND | | |
| Power S. bd → | LED GND | 18 | 17 | LED GND | ← | Power S. bd |
| | LED GND | 16 | 15 | LED GND | | |
| | | 14 | 13 | +15V DGT | ← | Power S. bd |
| Power S. bd → | +15V DGT | 12 | 11 | +15V DGT | | |
| | +15V DGT | 10 | 9 | | | |
| | +5V DGT | 8 | 7 | +5V DGT | | |
| Power S. bd → | +5V DGT | 6 | 5 | +5V DGT | | |
| | +5V DGT | 4 | 3 | +5V DGT | ← | Power S. bd |
| | +5V DGT | 2 | 1 | +5V DGT | | |

## PRINTER SAMPLER BOARD CONNECTOR P2PR TABLE

| | | | | | | |
|---|---|---|---|---|---|---|
| Power S. bd → | DGT GND | 50 | 49 | | | |
| Power S. bd → | DGT GND | 48 | 47 | | | |
| | POL KEY | 46 | 45 | | | |
| Power S. bd → | DGT GND | 44 | 43 | IS 4/ | ← | SBC |
| SBC → | IS 3/ | 42 | 41 | | | |
| | DGT GND | 40 | 39 | MEMW/ | ← | SBC |
| | DGT GND | 38 | 37 | | | |
| Power S. bd → | DGT GND | 36 | 35 | | | |
| | DGT GND | 34 | 33 | A1 | ← | SBC |
| | DGT GND | 32 | 31 | A0 | ← | SBC |
| | DGT GND | 30 | 29 | D7 | ← | SBC |
| SBC → | D6 | 28 | 27 | D5 | ← | SBC |
| Power S. bd → | DGT GND | 26 | 25 | D4 | ← | SBC |
| SBC → | D3 | 24 | 23 | D2 | ← | SBC |
| Power S. bd → | DGT GND | 22 | 21 | D1 | ← | SBC |
| SBC → | D0 | 20 | 19 | | | |
| | AN. GND | 18 | 17 | | | |
| | AN. GND | 16 | 15 | | | |
| Power S. bd → | AN. GND | 14 | 13 | | | |
| | AN. GND | 12 | 11 | Samp. mot. En. | ← | Power S. bd |
| | AN. GND | 10 | 9 | +15V AN. | ← | Power S. bd |
| Power S. bd → | +15V AN. | 8 | 7 | +15V AN. | | |
| | +15V AN. | 6 | 5 | -15V AN. | | |
| Power S. bd → | -15V AN. | 4 | 3 | -15V AN. | ← | Power S. bd |
| Power S. bd → | -15V AN. | 2 | 1 | AN. GND | ← | Power S. bd |

## PRINTER SAMPLER BOARD CONNECTOR P23 TABLE

| | | | | | | |
|---|---|---|---|---|---|---|
| Sampler Interconnection bd. ← | DGT GND | 20 | 19 | Cup Detect. Receiv. +15V. AN. | → | |
| → | Cup Detect. Receiv. Signal | 18 | 17 | DGT GND | → | |
| | POL KEY | 16 | 15 | Cup Detect. Trasm. +27, 5V Unreg. | → | |
| ← | Cup Detect. Trasm. Return | 14 | 13 | Cup Detector Trasm. Return | ← | |
| ← | Cup Detect. Trasm. Return | 12 | 11 | DGT GND | → | |
| ← | Sampler Opt. Sw. Trasm. Return | 10 | 9 | Sampler Opt. Sw. Receiv. Signal | → | Sampler Interconnection Board |
| | Sampler Opt. +5V DGT | 8 | 7 | DGT GND | → | |
| ← | DGT GND | 6 | 5 | Sampler Motor 25, 5 Vac | → | |
| ← | Sampler Motor 25, 5 Vac | 4 | 3 | Sampler Motor CMD | ← | |
| ← | Sampler Motor CMD | 2 | 1 | DGT GND | → | |

| ITEM | CODE | DESCRIPTION | Qty | Supply | Assy | NOTES |
|---|---|---|---|---|---|---|
| 1 | 71142-05 | FABRICATION BOARD * | 1 | A | | |
| 2 | | | | | | |
| 3 | 71736-00 | VOL. REG. µA 7815 KC (TO3) | 1 | S | | U1 ES 11509-13 |
| 4 | 66743-00 | VOL. REG. LM 323 K | 1 | S | | U2 |
| | 66770-06 | VOL. REG. µA 79M15 UC | 1 | S | | U3 |
| | 66770-05 | VOL. REG. µA 79M15 UC | 1 | S | | U4 |
| | 72814-00 | I.C. 7406 | 1 | S | | U5 |
| 8 | 66780-00 | I.C. 74LS74 | 1 | S | | U6 |
| 9 | 73611-00 | I.C. 74LS10 | 1 | S | | U7 |
| 10 | 73608-00 | I.C. 74LS03 | 2 | S | | U8-9 |
| 11 | 71719-00 | I.C. 74LS14 | 1 | S | | U10 |
| 12 | 74435-00 | I.C. 7407 | 2 | S | | U11-12 |
| 13 | 66740-00 | I.C. 74LS04 | 1 | S | | U13 |
| 14 | 74078-00 | I.C. 74LS10 | 1 | S | | U14 |
| 15 | 71722-00 | I.C. 74LS373 | 1 | S | | U16 |
| 16 | 71726-00 | I.C. OP. IS. TIL 113 | 9 | S | | U21 to U29 |
| 17 | 37382-00 | I.C. 555 | 5 | S | | U15-17-18-19-2 |
| 18 | | | | | | |
| 19 | | | | | | |
| 20 | 96388-29 | RES. 220 OHM 1/4 W 5% | 3 | S | | R1-2-4 |
| 21 | 96388-65 | RES. 220 OHM 1/4 W 5% | 1 | S | | R5 |
| 22 | 96388-70 | RES. 560 K 1/4 W 5% | 1 | S | | R3 |
| 23 | 96388-41 | Res. 22 K 1/4 W 5% | 9 | S | | R10-14-17-25-33 23-60-56-[illegible] |
| 24 | 96388-27 | RES 150 OHM 1/4 W 5% | 1 | S | | R24 |
| 25 | 96388-37 | RES. 1 K 1/4 W 5% | 13 | S | | [illegible] |
| 26 | 96388-45 | Res 4.7 K 1/4 W 5% | 1 | S | | R8 |
| 27 | 96388-49 | RES. 10 K 1/4 W 5% | 8 | S | | [illegible] |
| 28 | 96388-13 | RES. 10 OHM 1/4 W 5 % | 1 | S | | R6 |
| 29 | 96388-40 | RES. 1.8 K 1/4 W 5 % | 10 | S | | [illegible] |
| 30 | 96388-53 | RES. 22 K 1/4 W 5 % | 1 | S | | R15 |
| 31 | 96388-61 | RES. 100 K 1/4 W 5 % | 3 | S | | R18-20-22 |
| 32 | 96382-97 | RES. 57.6 K 1/4 W 1 % | 1 | S | | R13 |
| 33 | 96382-91 | RES. 49.9 K 1/4 W 1 % | 1 | S | | R17 ⚠ |
| 34 | 96387-75 | RES. 1.5 MOHM 1/2 W 5 % | 1 | S | | R16 |
| 35 | 96387-85 | RES. 10 MOHM 1/2 W 5 % | 1 | S | | R38 |
| 36 | | | | | | |
| 37 | 96387-25 | RES. 100 OHM 1/2 W 5 % | 1 | S | | R7 |
| 38 | 96387-40 | RES. 1.8 K 1/2 W 5 % | 8 | S | | [illegible] |
| 39 | 96392-06 | RES. 100 K 1.8 W 5 % | 1 | S | | R36 |
| 40 | 96390-01 | RES. 33 K 1 W 5 % | 1 | S | | R39 |
| 41 | | | | | | |
| 42 | 96444-03 | RES. ARRAY 7x10 K | 3 | S | | RP2-3-4 |
| 43 | | | | | | |
| 44 | 75751-02 | TRIMMER 20 OHM 1 TURN | 1 | S | | RV1 |
| 45 | | | | | | |
| 46 | 67327-02 | CAP. 0.1 µF 50 V CERAM. | 32 | S | | C1-2-3-4-7-8-16 [illegible] |
| 47 | | | | | | |
| 48 | 67330-00 | CAP. 10 µF 100V POLYES | 1 | S | | C45 |
| 49 | 67279-01 | CAP. 1 µF 35 V TANT. | 4 | S | | C6-15-24-46 |
| 50 | 67279-03 | CAP. 22 µF 16 V TANT. | 1 | S | | C5 |
| | 67331-01 | CAP. 15 µF 20 V TANT. | 8 | S | | C9-11-12-18 22-27-13-29 |
| | 67322-07 | CAP. 1000 µF 40 V ELECTR | 2 | S | | C19-20 |
| 53 | 67322-08 | CAP. 2200 µF 40 V ELECTR | 2 | S | | C23-38 |
| 54 | 67279-05 | CAP. 100 µF 20 V TANT. | 1 | S | | C31 |
| 55 | 67307-00 | CAP. 1 µF 630 V POLYES. | 1 | S | | C39 |
| 56 | 67251-08 | CAP. 0,1 µF 160 V POLYCARB. | 3 | S | | C40-43-44 |
| 57a | 67332-00 | CAP. 60 µF ELECTR. not POLAR. | 1 | S | | C47 |
| 57b | ES 11509-31 | CAP. 100 µF 100 V ELECTR. | 2 | S | | C41-42 ES11509 |
| 57b | 68251-00 | DIODE 1N40-7 | 2 | S | | [illegible] |
| 58 | | | | | | |
| 59 | | | | | | |
| 60 | 68249 | DIODE BRIDGE W 301 | 1 | S | | CR1 |
| 61 | 67425-00 | DIODE 1N4997 | 2 | S | | CR2-3 |
| 62 | 56176-00 | DIODE 1N914 | 13 | S | | [illegible] |
| 63 | 68251-00 | DIODE 1N4007 | 6 | S | | [illegible] |
| 64 | 68241-00 | DIODE BAZ 15 | 1 | S | | CR6 |
| 65 | | | | | | |
| 66 | | | | | | |
| 67 | 98781-00 | TRANSISTOR MPSA06 | 3 | S | | Q2-3-4 |
| 68 | 98762-00 | TRANSISTOR BFX37 | 1 | S | | Q1 |
| 69 | 98792-00 | TRANSISTOR TIP 120 | 1 | S | | Q6 |
| 70 | 98494-00 | TRIAC TIC 206 D | 7 | S | | Q7 to Q13 |
| | 98496-00 | S C R TIC 106 D | 1 | S | | Q5 |
| | | | | | | |
| 1 | | | | | | |
| 74 | 70328-00 | CONN. 3N HEADER STRAIGHT PCB MOUN SOLIN | 2 | S | | P1-2 |
| 75 | 70259-00 | " " " " " 26PIN | 1 | S | | P13 |
| 76 | 59008-00 | " " " " " 20PIN | 1 | S | | P12 |

Notes * USE 67322-08 OR IN ALTERNATIVE ES 11509-31 PLUG [illegible]

| ITEM | CODE | DESCRIPTION | Qty | Supply | Assy | NOTES |
|---|---|---|---|---|---|---|
| 77 | 73618-02 | CONN. BERG STRAIGHT 2 PIN | 1 | S | | JR1 |
| 78 | 70298-01 | CONN. MOLEX MALE 4 PIN | 1 | S | | |
| 79 | 67641-05 | CONN. MOLEX MALE W&P 6 PIN | 1 | S | | |
| 80 | 67641-03 | CONN. MOLEX MALE 4 PIN W.L.R. | 1 | S | | |
| 81 | 70298-04 | CONN. MOLEX MALE 10 PIN | 1 | S | | |
| 82 | 67641-01 | CONN. MOLEX MALE 2 PIL W.L.R. | 5 | S | | |
| 83 | 70327-00 | CONN. AMP MALE 6 PIN | 2 | S | | P8-9 ⚠ |
| 84 | 70289-00 | Mini Jump Berg Female | 1 | S | | |
| 85 | | | | | | |
| 86 | 95824-00 | HEAT SINK MODIFIED WAKEFIELD | 1 | A | X | |
| 87 | 69339-00 | INSULATING BUSHING | 4 | A | | |
| 88a | 69340-00 | INSULATOR FOR TO3 (CHOMERICS) | 2 | S | | ES 11509-26 |
| 88a | 69331-00 | INSULAT. FOR TO3 (MICA) | 2 | S | | |
| 88a | 69953-00 | SILICONE GREASE | / | S | | |
| 91 | | | | | | |
| 92 | | | | | | |
| 93 | 97941-11 | TEST POINT | 8 | S | | TP1 to TP8 |
| 94 | | | | | | |
| 95 | | | | | | |
| 96 | 96483 | INSR FER SHIELDING BEAD | 2 | S | | |
| 97 | 57356-03 | DIODE PAD | 2 | S | | |
| 98 | 57356-02 | TRANSISTOR PAD FOR TO 18 | 3 | S | | |
| 99 | 57356-02 | TRANSISTOR PAD FOR TO 5 | 1 | S | | |
| 100 | 96767-10 | FLAT WASHER I.D. 3,2mm | 26 | S | | |
| 101 | 96766-03 | WASHER EXTERNAL LOCK I.D. 3,2mm | 8 | S | | |
| 102 | 99588-03 | SCREW M3 x 0,5 mm L=8mm | 13 | S | | |
| 103 | 99588-05 | SCREW M3 x 0,5mm L= 12mm | 4 | S | | |
| 104 | 68060-04 | NUT M3 x 0,5 mm | 17 | S | | |
| 105 | | | | | | |
| 106 | 99944-02 | PANDUIT STA STRAPP | 7 | S | | |
| 107 | | | | | | |
| 108 | | | | | | |
| 109 | 71250-01 | Bus bar P 12,7mm 8 PIN | 1 | A/a | X | |
| 110 | 71250-02 | Bus bar P 12,7mm 9 PIN | 1 | A/a | X | |
| 111 | 71250-03 | Bus bar P 12,7mm 12 PIN | 2 | A/a | X | |
| 112 | 71250-04 | Bus bar P 12,7mm 13 PIN | 2 | A/a | X | |
| 113 | 71250-05 | Bus bar P 12,7mm 14 PIN | 2 | A/a | X | |
| 114 | | | | | | |
| 115 | | | | | | |
| 116 | 82080-00 | Power supply board schematic | REF | | | |
| 117 | | | | | | |
| 118 | | | | | | |
| 119 | | | | | | |
| 120 | | | | | | |
| | 97677-01 | Power Supply Board Q.A. Procedure | REF. | S | | |
| | 83005-02 | TEST PROC. POWER SUPPLY 943 | REF. | S | | |
| | 97266-15 | PCB cleaning & leakage protect. procedure | Ref | S | | |

SECT AA SCALE NONE

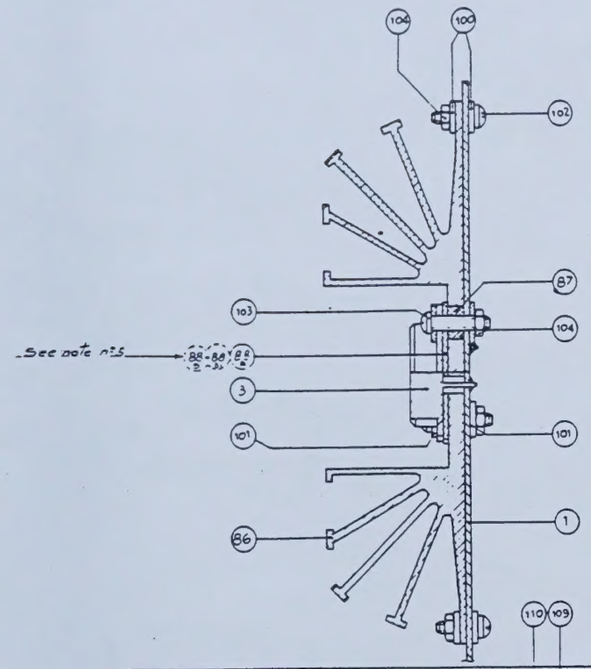


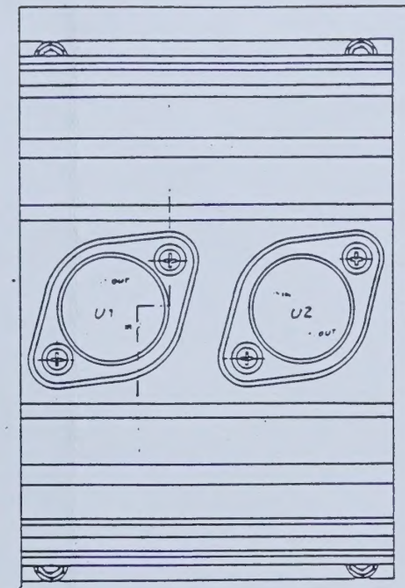


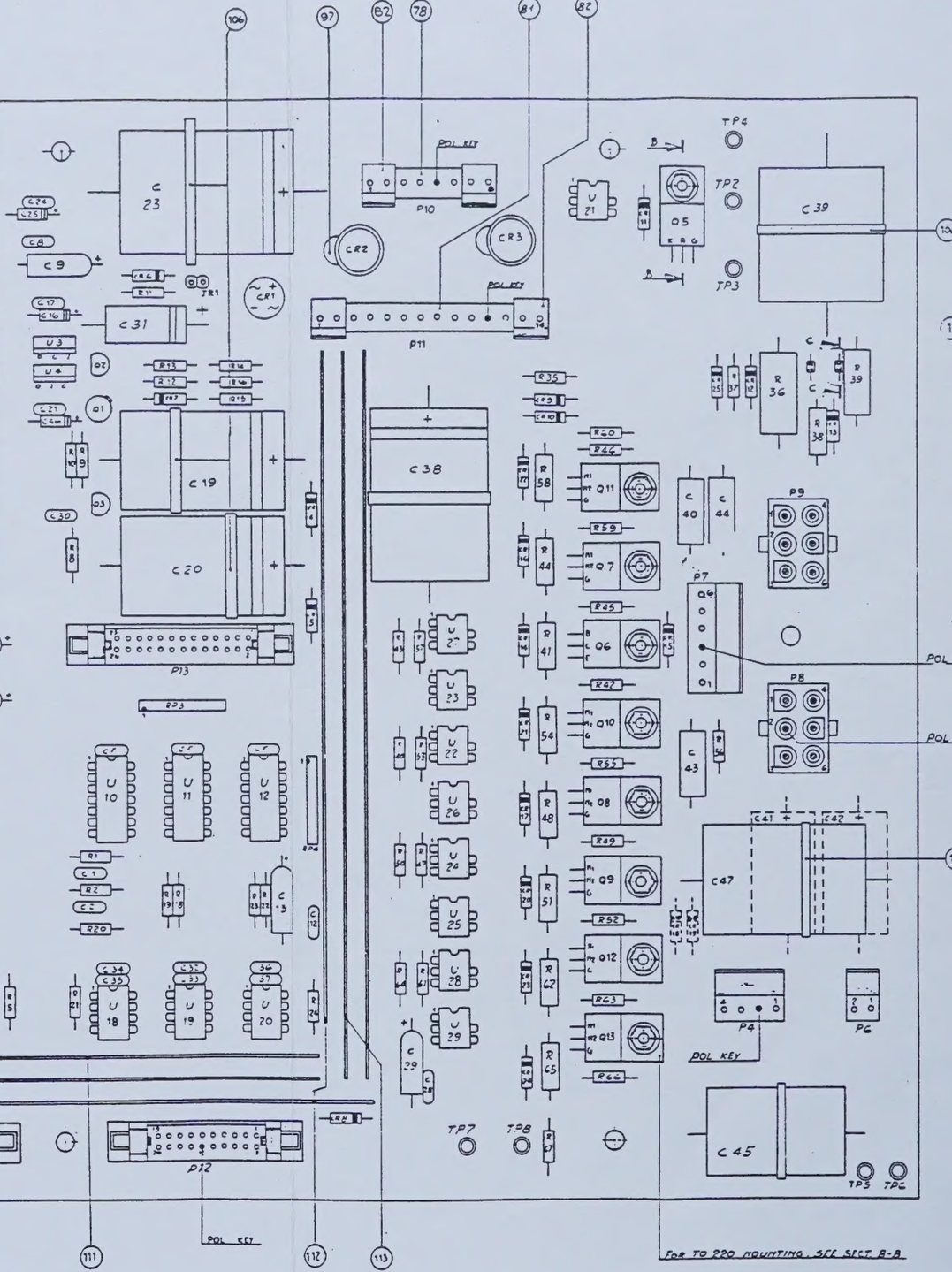


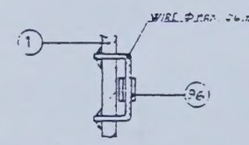


SECT C-C SCALE NONE

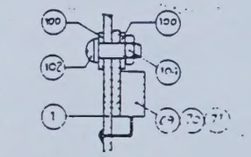


SECT B-B SCALE NONE


* THIS DOCUMENT CONTAINS PROPRIETARY INFORMATION OF INSTRUMENTATION LABORATORY SPA (IL). NONE OF THE INFORMATION CONTAINED HEREIN IS TO BE DISCLOSED OR USED IN WHOLE OR IN PART FOR ANY PURPOSE WITHOUT WRITTEN PERMISSION OF IL. THIS DOCUMENT IS SUBJECT TO RECALL BY IL AT ANY TIME.


Notes

1) Remove key pins indicated on the drawn assembly (TOT 8 PINS)

2) To cut pin 6 of U21-U22-U23-U24-U25-U26-U27-U28-U29

3)

4) Alternately to C47 can be assembled C43-C42-C44-C45
See dashed part of the drawn assembly.

5) As an alternative to the Chemerics insulator (POS 88 of the material bill) one may use the mica insulator (ITEM AAA) with silicone grease (ITEM AAB)

6) The reinforced silicone insulator (ITEM AAA) don't withstand to soldering iron temperature

Instrumentation Laboratory

POWER SUPPLY BOARD ASSY

84984-00

14

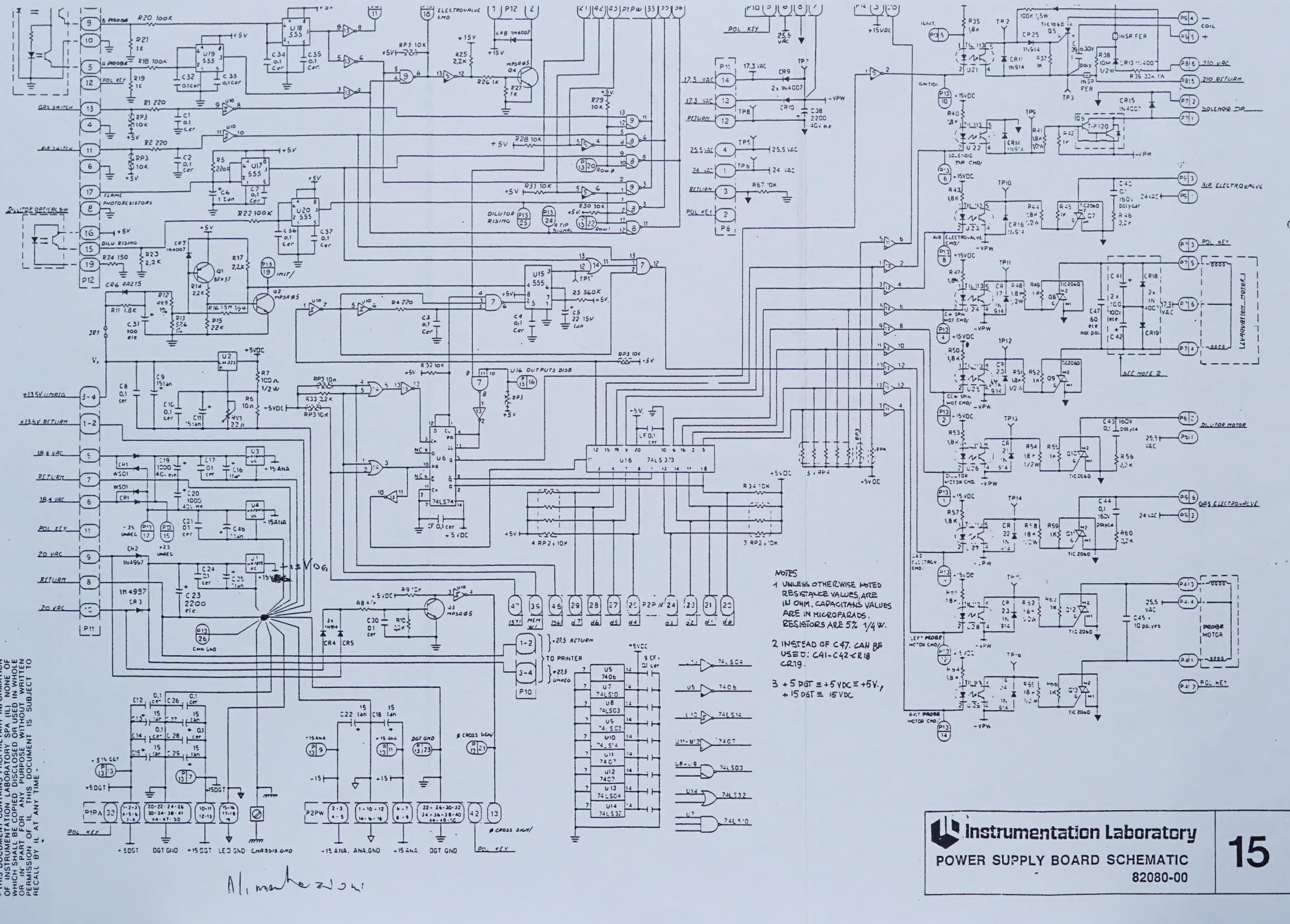
P12
P11
P10
P1PA
P2PW
U1 LM323
U2 LM323
U3 LM323
U4 LM323
U5 7406
U6 74LS373
U7 74LS10
U8 74LS03
U9 74LS03
U10 74LS14
U11 7407
U12 7407
U13 74LS04
U14 74LS32
U15 555
U16 74LS373
U17 555
U18 555
U19 555
U20 555
Q1 BF457
Q2 MPSA05
Q3 MPSA05
Q4 MPSA05
Q5 TIP120
Q6 TIC2060
Q7 TIC2060
Q8 TIC2060
Q9 TIC2060
Q10 TIC2060
Q11 TIC2060
Q12 TIC2060
U21
U22
U23
U24
U25
U26
U27
U28
U29
U30
U31
U32
U33
U34
U35
U36
U37
U38
U39
U40
U41
U42
U43
U44
U45
U46
U47
U48
U49
U50
U51
U52
U53
U54
U55
U56
U57
U58
U59
U60

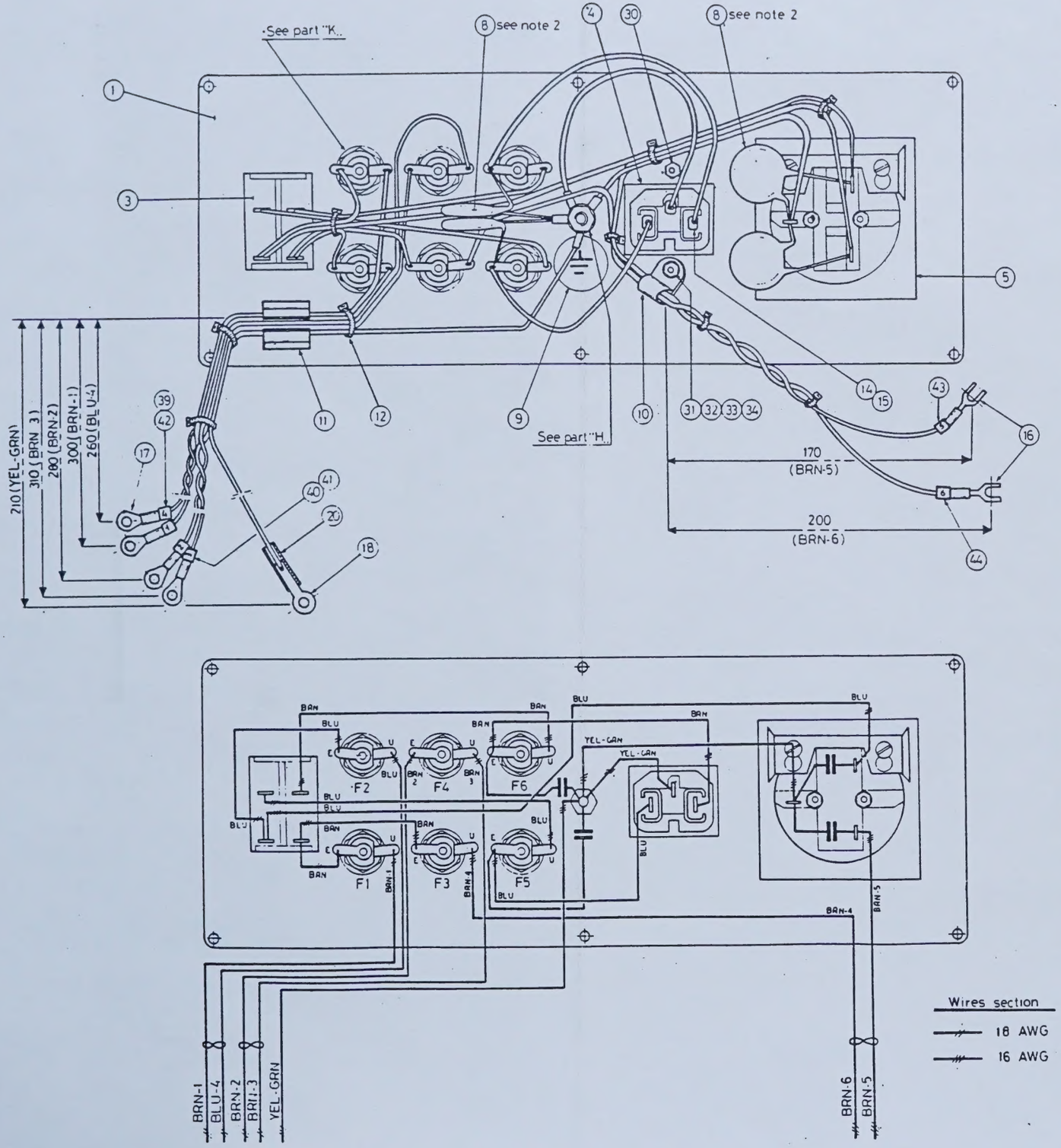


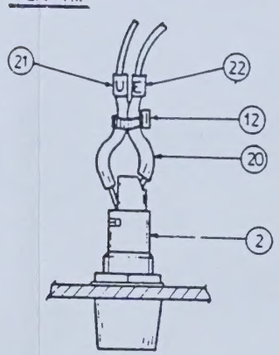


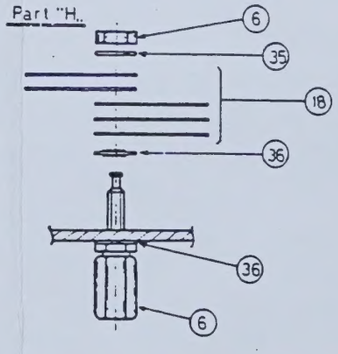


| | | | | | |
|---|---|---|---|---|---|
| 3 | 70902-00 | POWER SWITCH | 1 | S | |
| 4 | 97944-00 | POWER PLUG 10A 250V | 1 | S | |
| 5 | 70280-00 | SCHUCO RECEPTACLE | 1 | S | |
| 6 | 66977-00 | POST BINDING METAL | 1 | S | |
| 7 | | | | | |
| 8 | 67328-00 | CAPACITOR CERAMIC 3.9 nF 400V | 4 | S | |
| 9 | 71785-01 | LABEL FUNCTIONAL EARTH | 1 | A/4 | |
| 10 | 69931-01 | LOOPING CLAMP | 1 | S | |
| 11 | 69982-03 | SELF-ADHESIVE CLIP TYPE KKU-6 | 1 | S | ES 11523-74 |
| 12 | 69944-01 | CLAMP PANDUIT | 15 | S | |
| 13 | | | | | |
| 14 | 66423-06 | FEMALE FASTON (6.35) | 3 | S | |
| 15 | 66427-02 | FASTON COVER | 3 | S | |
| 16 | 66421-01 | FORK TERMINAL | 2 | S | |
| 17 | 66440-05 | ROUND TERMINAL | 4 | S | |
| 18 | 66413-13 | LUG SOLDER TERMINAL L=21mm | 5 | S | |
| 19 | | | | | |
| 20 | 99105-02 | RUBBER TUBING INSULATED I.D. 3x25LG | 25 | S | |
| 21 | 97297-21 | WIRE-MARKER -U- | 6 | S | |
| 22 | 97297-05 | WIRE-MARKER -E- | 6 | S | |
| 23 | | | | | |
| 24 | 68701-08 | WIRE 18 AWG BLUE " " mt | 0,45 | S | |
| 25 | 68701-03 | WIRE 18 AWG BRN " " mt | 1,20 | S | |
| 26 | 68708-29 | WIRE 16 AWG YEL-GRN " " mt | 0,35 | S | |
| 27 | 68708-08 | WIRE 16 AWG BLU CSA APPROVED mt | 0,35 | S | |
| 28 | 68708-03 | WIRE 16 AWG BRN " " mt | 0,8 | S | |
| 29 | | | | | |
| 30 | 99606-02 | SCREW M3 L=6mm | 1 | S | |
| 31 | 99606-04 | SCREW M3 L=10 mm | 1 | S | |
| 32 | 68060-05 | NUT M3x0,5 | 2 | S | |
| 33 | 96763-04 | FLAT WASHER I.D. 3.2 | 1 | S | |
| 34 | 96764-04 | LOCK WASHER SPLIT I.D. 3.2 | 1 | S | |
| 35 | 96764-05 | LOCK WASHER SPLIT I.D. 4.2 | 1 | S | |
| 36 | 96765-04 | INT. LOCK WASHER I.D. 4.2 | 2 | S | |
| 37 | | | | | |
| 38 | | | | | |
| 39 | 97296-01 | WIRE HARN 1 | 1 | S | |
| 40 | 97296-02 | WIRE HARN 2 | 1 | S | |
| 41 | 97296-03 | WIRE HARN 3 | 1 | S | |
| 42 | 97296-04 | WIRE HARN 4 | 1 | S | |
| 43 | 97296-05 | WIRE HARN 5 | 1 | S | |
| 44 | 97296-06 | WIRE HARN 6 | 1 | S | |
| 45 | 99119-04 | STERLING I.D. 1 mt | 0,007 | | |
| | | | | | |
| | | | | | |
| | | | | | |
| | | | | | |
| | | | | | |
| | 84006-16 | MOUNTING PROCEDURE POWER SWITCH and FUSES ASST | | S | |




Wires section

18 AWG

16 AWG

NOTE

1. Cover each soldering with a rubber tubing insulator (see b.m. item 20)
2. Cover ceramic capacitor leads by sterling (see b.m. item 45)

**Instrumentation Laboratory**

POWER SWITCH AND FUSES ASSY

71045-00

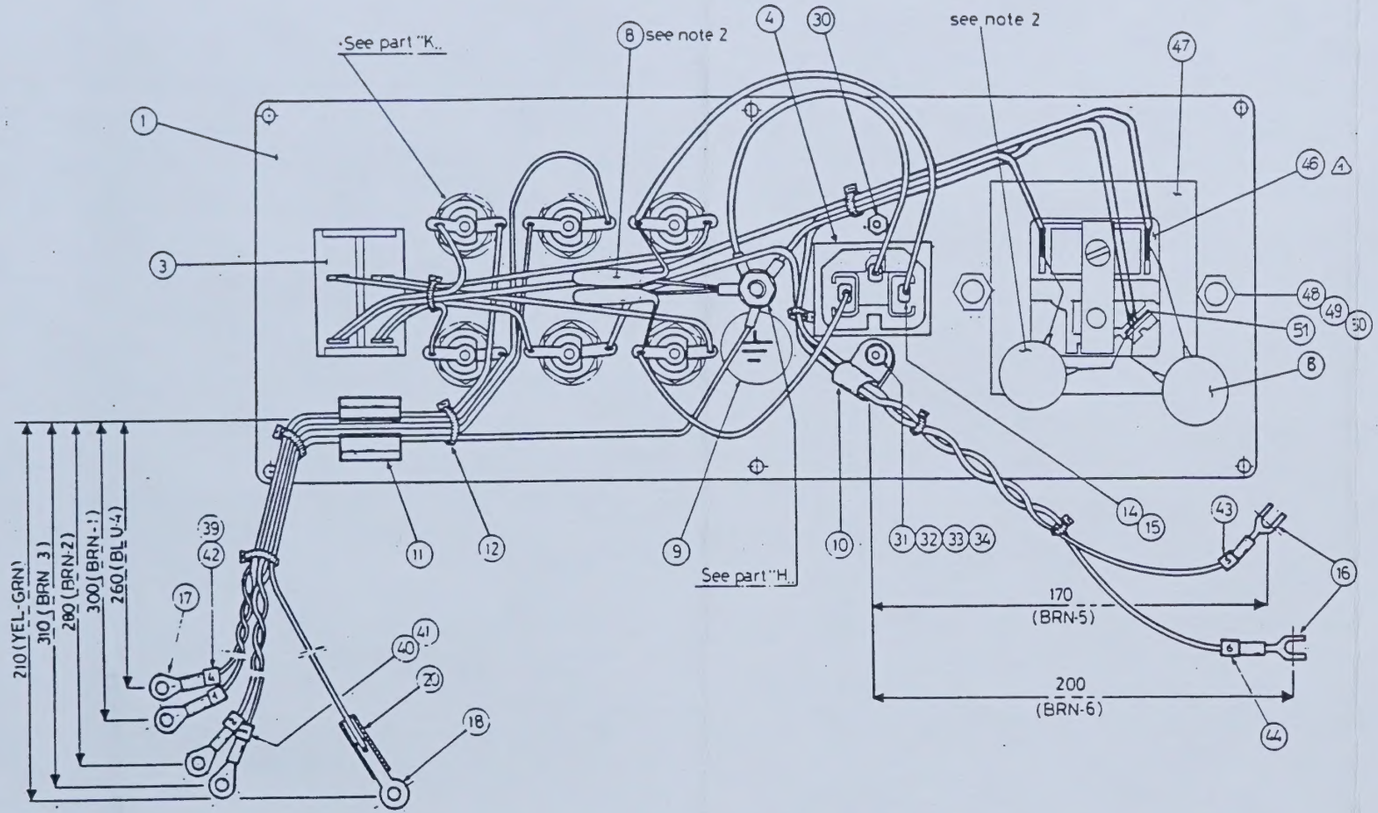


Part "K..

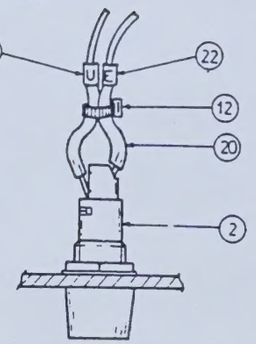

Part "H..

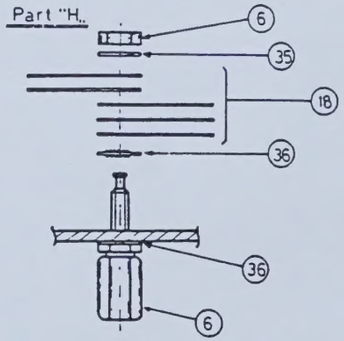

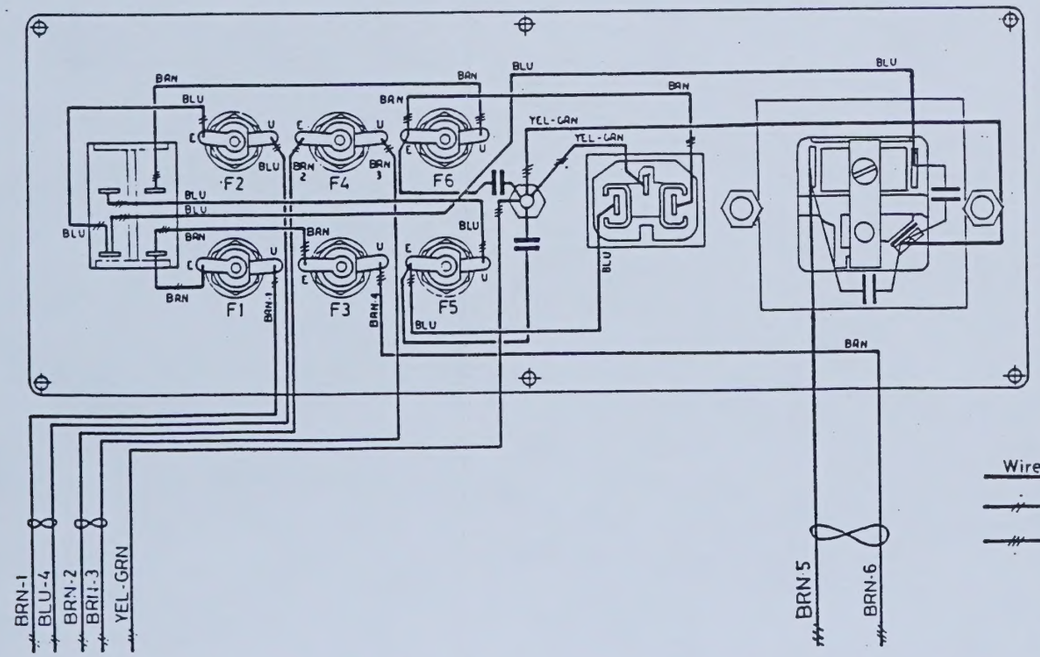


Wires section

- 18 AWG
- 16 AWG

| | | | | | | |
|---|---|---|---|---|---|---|
| 2 | | FUSE HOLDER | 2 | S | | |
| 3 | 67017-13 | TOGGLE SWITCH 15A/250V | 1 | S | | |
| 4 | 97944-00 | POWER PLUG 10A 250V | 1 | S | | |
| 5 | | | 1 | S | | |
| 6 | 66977-00 | POST BINDING METAL | 1 | S | | |
| 7 | | | | | | |
| 8 | 72268-05 | CAPACITOR CERAMIC 3.9 nF 400V | 4 | S | | |
| 9 | 71785-01 | LABEL FUNCTIONAL EARTH | 1 | A | | |
| 10 | 69931-01 | LOOPING CLAMP | 1 | S | | |
| 11 | 69982-03 | SELF-ADHESIVE CLIP TYPE KKU-6 | 1 | S | | ES 11525-75 |
| 12 | 69944-01 | CLAMP PANDUIT | 15 | S | | |
| 13 | | | | | | |
| 14 | 66423-06 | FEMALE FASTON (6.35) | 3 | S | | |
| 15 | 66427-02 | FASTON COVER | 3 | S | | |
| 16 | 66421-01 | FORK TERMINAL | 2 | S | | |
| 17 | 66440-05 | ROUND TERMINAL | 4 | S | | |
| 18 | 66413-13 | LUG SOLDER TERMINAL L=21mm | 5 | S | | |
| 19 | | | | | | |
| 20 | 99105-02 | RUBBER TUBING INSULATED I.D. 3±25LG | 25 | S | | |
| 21 | 97297-21 | WIRE-MARKER -U- | 6 | S | | |
| 22 | 97297-05 | WIRE-MARKER -E- | 6 | S | | |
| 23 | | | | | | |
| 24 | 68701-08 | WIRE 18 AWG BLUE " " m | 0,45 | S | | |
| 25 | 68701-03 | WIRE 18 AWG BRN " " m | 1,20 | S | | |
| 26 | 68708-28 | WIRE 16 AWG YEL-GRN " " m | 0.35 | S | | |
| 27 | 68708-08 | WIRE 16 AWG BLU CSA APPROVED m | 0,35 | S | | |
| 28 | 68708-03 | WIRE 16 AWG BRN " " m | 0.8 | S | | |
| 29 | | | | | | |
| 30 | 99606-02 | SCREW M3 L=6mm | 1 | S | | |
| 31 | 99606-04 | SCREW M3 L=10 mm | 1 | S | | |
| 32 | 68060-05 | NUT M3±0,5 | 2 | S | | |
| 33 | 96763-05 | FLAT WASHER I.D. 3.2 | 1 | S | | |
| 34 | 96764-04 | LOCK WASHER SPLIT I.D. 3.2 | 1 | S | | |
| 35 | 96764-05 | LOCK WASHER SPLIT I.D. 4.2 | 1 | S | | |
| 36 | 96765-05 | INT. LOCK WASHER I.D. 4.2 | 2 | S | | |
| 37 | | | | | | |
| 38 | | | | | | |
| 39 | 97296-01 | WIRE MARK 1 | 1 | S | | |
| 40 | 97296-02 | WIRE MARK 2 | 1 | S | | |
| 41 | 97296-03 | WIRE MARK 3 | 1 | S | | |
| 42 | 97296-04 | WIRE MARK 4 | 1 | S | | |
| 43 | 97296-05 | WIRE MARK 5 | 1 | S | | |
| 44 | 97296-06 | WIRE MARK 6 | 1 | S | | |
| 45 | 99119-05 | STERLING I.D. 1 m | 0.060 | | | |
| 46 | 73559-00 | RECP U6ND 15A 120V BLK | 1 | S | | |
| 47 | 95527-00 | ASSY PLATE RECP U6ND | 1 | A | X | |
| 48 | 96764-04 | LOCK WASHER SPLIT I.D 3,2 | 2 | S | | |
| 49 | 96763-05 | WASHER FLAT ID 3,2 | 2 | S | | |
| 50 | 68060-05 | NUT HEX M3 0,5 | 2 | S | | |
| 51 | 66425-08 | LUG SOLDER ID 4,2 | 1 | S | | |

NOTE

1. Cover each soldering with a rubber tubing insulator (see b.m. item 20)
2. Cover ceramic capacitor leads by sterling (see b.m. item 45)

**Instrumentation Laboratory**
POWER SWITCH AND FUSES ASSY
U.L. VERSION (USA) 71055-00

16A

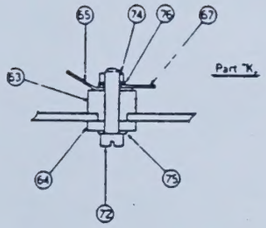


| * U1-U2-U4 | R39-R40 | CR1-CR2 | C2-C3-C5 C6-C9-C10 | RV1-RV8-RV9 |
|---|---|---|---|---|
| ICL 7650 | YES | YES | YES | NO |
| AD 3731 | TO SHORT | NO | NO | YES |

NOTE : When assembling the AD3731, solder pins 1 and 8 directly onto the printed circuit instead of on the teflon turrets. In this case the turrets must not be assembled.

Clean and protect PCB. using IL procedure code 97666-15

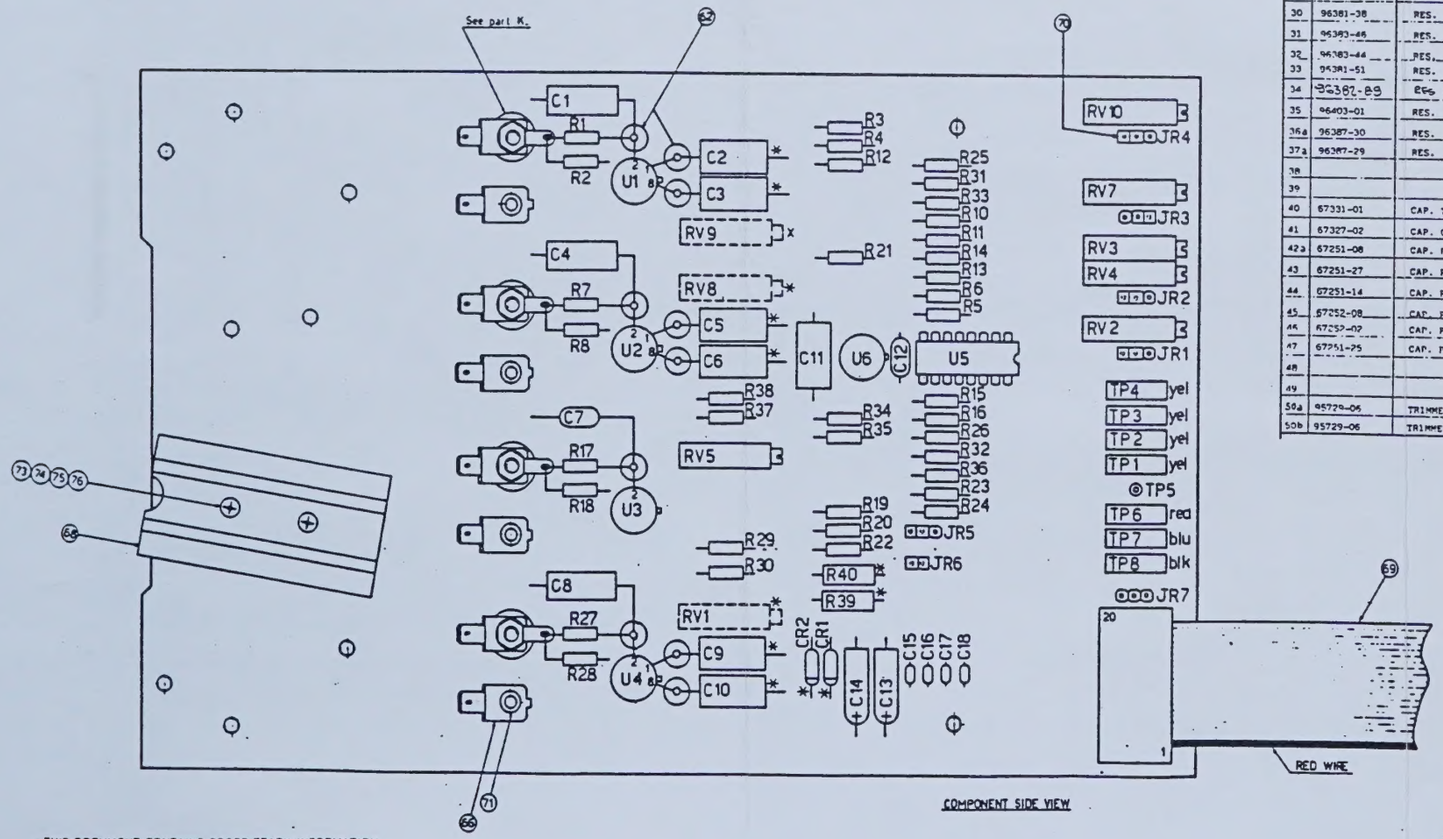


COMPONENT SIDE VIEW

| ITEM | CODE | DESCRIPTION | Q.ty | Assy | NOTES |
|---|---|---|---|---|---|
| 1 | 71156-02 | FABRICATION BOARD | 1 | S | |
| 2a | 71735-00 | ICL 7650 | 3 | S | U1-2-4 |
| *2b | 73507 | I.C. AD 3731 | | | |
| 3 | | | | | |
| 4 | | | | | |
| 5 | 73577-00 | I.C. AD 3731 | 1 | S | U3 |
| 6 | | | | | |
| 7 | 57515-00 | I.C. LM 301 A | 1 | S | U6 |
| 8 | 71710-00 | I.C. DG 508 CJ | 1 | S | U5 |
| 9 | | | | | |
| 10 | | | | | |
| 11 | 96402-09 | RES. 22 MOHM 1/4 W 10% | 2 | S | R2-22 |
| 12 | 96388-63 | RES. 150 KOHM 1/4 W 5% | 1 | S | R19 |
| 13 | 96388-51 | RES. 15 KOHM 1/4 W 5% | 1 | S | R21 |
| 14 | 96388-64 | RES. 180 KOHM 1/4 W 5% | 1 | S | R36 |
| 15 | 96387-77 | RES. 2.2 MOHM 1/2 W 5% | 2 | S | R8-28 |
| 16 | 96388-49 | RES. 10 KHOM 1/4 W 5% | 1 | S | R33 |
| 17 | 96388-73 | RES. 1 MOHM 1/4 W 5% | 4 | S | R1-7-17-27 |
| 18 | | | | | |
| 19 | 96383-78 | RES. 118 KOHM 1/4 W 1% | 1 | S | R3 |
| 20 | 96381-58 | RES. 2.1 KOHM 1/4 W 1% | 3 | S | R4-12-31 |
| 21 | 96383-91 | RES. 536 KOHM 1/4 W 1% | 1 | S | R24 |
| 22 | 96382-59 | RES. 232 KOHM 1/4 W 1% | 2 | S | R6-R14 |
| 23 | 96382-38 | RES. 14 KOHM 1/4 W 1% | 3 | S | R11-26 |
| 24 | 96383-84 | RES. 453 KOHM 1/4 W 1% | 3 | S | R13-R32-R5 ⚠ |
| 25 | 96302-97 | RES. 57.6 KOHM 1/4 W 1% | 1 | S | R15 |
| 26 | 96382-83 | RES. 41.2 KOHM 1/4 W 1% | 1 | S | R37 |
| 27 | 96382-78 | RES. 34.8 KOHM 1/4 W 1% | 1 | S | R16 |
| 28 | 96383-62 | RES. 267 KOHM 1/4 W 1% | 1 | S | R23 |
| 29 | 96383-88 | RES. 499 KOHM 1/4 W 1% | 2 | S | R34-35 |
| 30 | 96381-38 | RES. 1.3 KOHM 1/4 W 1% | 1 | S | R25 |
| 31 | 96383-46 | RES. 182 KOHM 1/4 W 1% | 1 | S | R29 |
| 32 | 96383-44 | RES. 174 KOHM 1/4 W 1% | 1 | S | R10 |
| 33 | 96381-51 | RES. 1.78 KOHM 1/4 W 1% | 1 | S | R38 |
| 34 | 96387-89 | RES 42.5K 1/4 W 1% | 1 | S | R30 ⚠ |
| 35 | 96403-01 | RES. 1000 MOHM 1/4 W 20% | 1 | S | R18 |
| 36a | 96387-30 | RES. 270 OHM 1/2 W 5% | 1 | S | R39 SOLO CON ICL 7630 |
| 37a | 96387-29 | RES. 220 OHM 1/2 W 5% | 1 | S | R40 SOLO CON ICL 7650 |
| 38 | | | | | |
| 39 | | | | | |
| 40 | 67331-01 | CAP. TANT. 15 UF 20 V | 2 | S | C13-14 |
| 41 | 67327-02 | CAP. CER. 0,1 UF 50 V | 4 | S | C15-16-17-18 |
| 42a | 67251-08 | CAP. POLIC. 0.1 UF 160 V | 6 | S | C2-3-5-6-9-10 SOLO CON ICL 7650 |
| 43 | 67251-27 | CAP. POLIC. 0.01 UF 160 V | 1 | S | C1 |
| 44 | 67251-14 | CAP. POLIC. 0,068 UF 100 V | 2 | S | C4-8 |
| 45 | 67252-08 | CAP. POLIS. 200 PF 160 V | 1 | S | C7 |
| 46 | 67252-02 | CAP. POLIS. 33 PF 160 V | 1 | S | C12 |
| 47 | 67251-25 | CAP. POLIC. 1 MF 160 V | 1 | S | C11 |
| 48 | | | | | |
| 49 | | | | | |
| 50a | 95729-06 | TRIMMER 10 KOHM 15 TURN | 4 | S | RV5 SOLO CON ICL 7650 |
| 50b | 95729-06 | TRIMMER 10 KOHM 15 TURN | 4 | S | RV1-8-9-5 SOLO CON AD 3731 |

| ITEM | CODE | DESCRIPTION | Q.ty | Assy | NOTES |
|---|---|---|---|---|---|
| 51 | 56397-00 | TRIMMER 20 KOHM 15 TURN | 5 | S | RV2-3-4-7-10 |
| 52 | | | | | |
| 53a | 56177-00 | DIODE ZENER 1N936 | 1 | S | CR2 SOLO CON ICL 7650 |
| 54a | 68258-07 | DIODE ZENER BZX79 C5 V6 | 1 | S | CR1 SOLO CON ICL 7650 |
| 55 | 73618-02 | BERG MALE CONNECTOR 2 P | 1 | S | JR6 |
| 56 | 73618-03 | BERG MALE CONNECTOR 3 P | 6 | S | JR1-2-3-4-5-7 |
| 57 | 97939-01 | TEST POINT BLACK | 1 | S | TP8 |
| 58 | 97939-03 | TEST POINT RED | 1 | S | TP6 |
| 59 | 97939-05 | TEST POINT YELLOW | 4 | S | TP1-2-3-4 |
| 60 | 97939-07 | TEST POINT BLUE | 1 | S | TP7 |
| 61 | 91241-11 | TEST POINT | 1 | S | TP5 ⚠ |
| 62a | 66426-00 | PIN INSULATED TEFLON | 40 | S | SOLO CON ICL 7650 |
| 62b | 66426-00 | PIN INSULATED TEFLON | 4 | S | SOLO CON AD 3731 |
| 63 | 69334-01 | BARR INSULATED FOR FASTON | 4 | S | |
| 64 | 69334-02 | TEFLON INSULATOR LOCK | 4 | S | |
| 65 | 66423-01 | MALE FASTON 45° TERMINALS | 4 | S | |
| 66 | 66423-02 | MALE FASTON 20° TERMINALS | 4 | S | |
| 67 | 66413-01 | LUG SOLDER TERMINAL L=12 mm | 4 | S | |
| 68 | 69355-00 | PHOTOTUBE CLIP | 1 | S | |
| 69 | 71991-03 | FLAT CABLE ASSY | 1 | S | |
| 70 | 70289-00 | MINI JUMPER BERG | 6 | S | |
| 71 | 96703-01 | T ACK RIVET Ø 3,5 H=3,5 | 4 | S | |
| 72 | 99508-07 | SCREW M3 L=16 mm | 4 | S | |
| 73 | 99508-03 | SCREW M3 L=8 mm | 2 | S | |
| 74 | 68060-05 | EXAGONAL NUT M3 | 6 | S | |
| 75 | 96763-05 | FLAT WASCHER I.D. 3,2 | 6 | S | |
| 76 | 96764-04 | LOCK WASHER SPLIT I.D. 3,2 | 6 | S | |
| 77 | | | | | |
| 78 | | | | | |
| | 97666-15 | PROTECT PROCEDURE | ref. | | |
| | 97677-04 | PHOTODIODE BOARD Q.A. PROCEDURE | REF. | S | |
| | 84005-05 | TEST PROC. PREAMPLIFIER 943 | REF | S | |
| | 82078-00 | 943_INPUT_AMPLIFIER_SCHEMATIC | Ref | S | |

- THIS DOCUMENT CONTAINS PROPRIETARY INFORMATION OF INSTRUMENTATION LABORATORY SPA (IL) NONE OF WHICH SHALL BE COPIED DISCLOSED OR USED IN WHOLE OR IN PART FOR ANY PURPOSE WITHOUT WRITTEN PERMISSION OF IL THIS DOCUMENT IS SUBJECT TO RECALL BY IL AT ANY TIME -

| | | | | | | | |
|---|---|---|---|---|---|---|---|
| 2 | 84970-00 | PHOTODIODE BOARD ASSY | 1 | A | 3 | I | |
| 3 | 96762-05 | WASHER FLAT | 10 | S | | | |
| 4 | 70868-00 | SPACER | 4 | A | 4 | | 85-11572-54 |
| 5 | 72057-00 | BACK PLATE ASST | 1 | A | 3 | I | 85-11572-57 |
| 6 | 96764-04 | LOCK WASHER SPLIT | 4 | S | | | |
| 7 | 99588-03 | CROSS SLOTTED SCREW | 6 | S | | | |
| 8 | 67857-00 | COVER ASST | 1 | A | 3 | I | 85-11572-55 |
| 9 | 98930-00 | LI PHOTODIODE | 1 | A | 3 | I | 85-11572-97 |
| 10 | 82252-00 | Na, K, Cs PHOTODIODE | 3 | A | 3 | I | 85-11572-87 |
| | | | | | | | |
| 11 | 33019-06 | FILTER Cs | 1 | A | 3 | I | 85-11575-85 |
| 12 | 27019-05 | FILTER Li | 1 | A | 3 | | |
| 13 | 27019-03 | FILTER K | 1 | A | 3 | | |
| 14 | 27019-01 | FILTER Na | 1 | A | 3 | | |
| 15 | 99705-03 | SCREW TYPE 2 | 2 | S | | | |
| 16 | 71866-00 | MOLTOPREN SELF-ADHESIVE TAPE 3/48 | mt | 0.300 | S | | |
| | | CUT IN TWO PIECES OF 0.150 mt | | | | | |
| 17 | 71859-00 | CAOUTCHOUC MOUSSE GASKET 10x3 | mt | 0.330 | S | | |
| | | CUT IN TWO PIECES OF 0.165 mt | | | | | |
| 18 | 06765-03 | WASHER INTERNAL LOCK 3.2, 1.2 | 2 | S | | | |
| 19 | 99705-01 | SCREW TYPE 2 | 4 | S | | | |
| 20 | 71815-00 | PHOTODIODE BOX LABEL | 1 | A | 4 | | |
| 21 | 71868-00 | GASKET | 1 | A | 4 | | |
| | | | | | | | |
| | 34005-** | MOUNTING PROCEDURE PHOD. BOX ASSY | REF | S | | | |

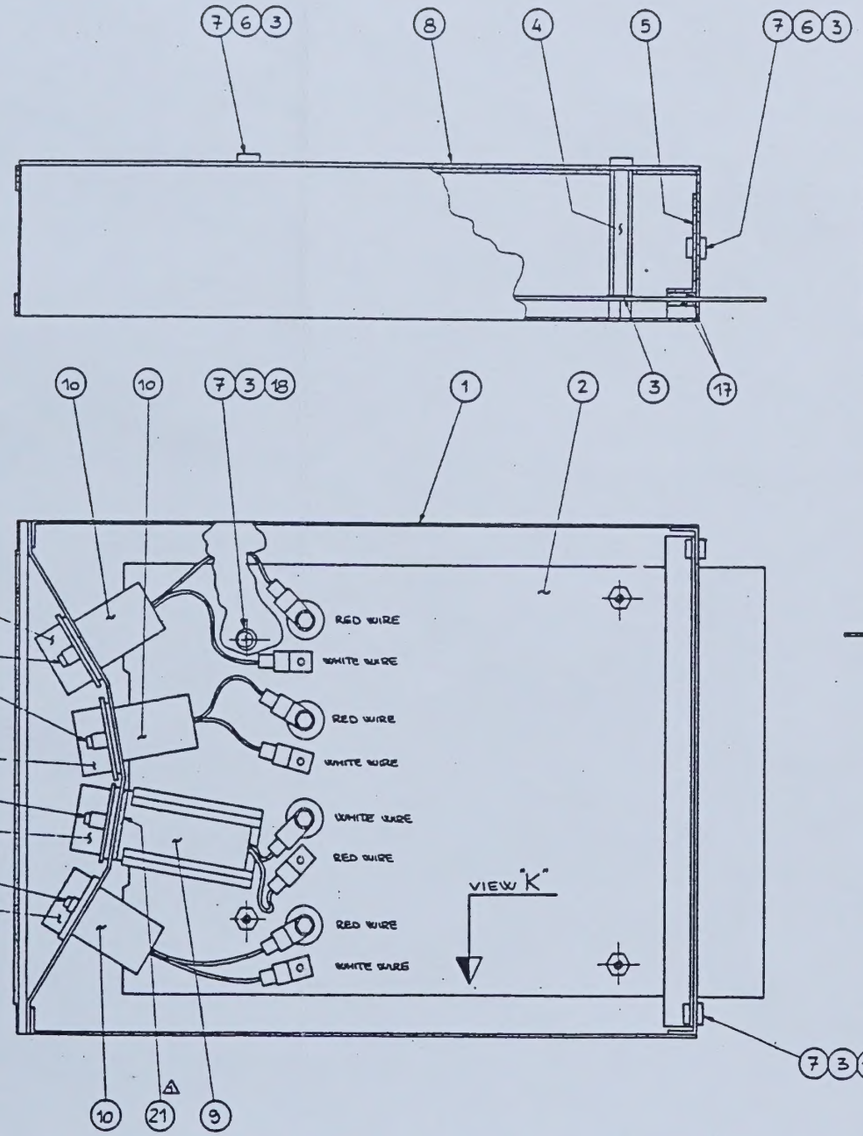


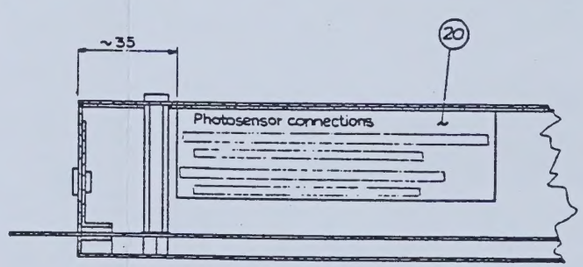


VIEW "K"

• THIS DOCUMENT CONTAINS PROPRIETARY INFORMATION OF INSTRUMENTATION LABORATORY SPA (IL). NONE OF WHICH SHALL BE COPIED, DISCLOSED OR USED IN WHOLE OR IN PART FOR ANY PURPOSE WITHOUT WRITTEN PERMISSION OF IL. THIS DOCUMENT IS SUBJECT TO RECALL BY IL AT ANY TIME •

Instrumentation Laboratory

ASSY BOX PHOTODIODE MTG

98927-00

17a

| | | | |
|---|---|---|---|
| Ø | Ø | Ø | 4 |
| Ø | Ø | 1 | 5 |
| Ø | 1 | Ø | 6 |
| Ø | 1 | 1 | 7 |
| 1 | Ø | Ø | 12 |
| 1 | Ø | 1 | 11 |
| 1 | 1 | Ø | 10 |
| 1 | 1 | 1 | 9 |

589.2nm

NA Photosensor

Hamamatsu 874/8K
or centronic OSD15

5% 1MΩ R1

red / wht

22MΩ 5% R2

C1 polyc. 0,01µF

U1 RV9 10K 15T. C2 C3 2x0,1µF polyc. -9V

118K R3 JR4 A B

232K R6

RV10 20K 15 TURNS cw

2,1K R4

404,5nm

K Photosensor

Hamamatsu 874/8K
or centronic OSD15

5% 1MΩ R7

5% 2,2MΩ R8

C4 polyc. 0,068µF

U2 V+ V- RV8 10K 15T. C5 C6 2x0,1µF polyc. -9V

5mmol/L = -143 mV

174K R10 14K R11 JR3 A B

453K R13 232K R14 57,6K R15 34,8K R16

20K RV7 15 TURNS cw R12 2,1K

670nm

Li Phototube

+15V

5% 1MΩ R17

20% 1000MΩ R18

C7 polyst. 220pF

AD3731 U3 RV5 10K cw +15V -15V

Ø = -150 mV
1mmol/L = -631 mV

536K R26

R19 150K 5% JR5 A B

R20 1M 5%

R21 15K 5%

R22 22M 5% JR6

RV4 20K 15 TURNS cw

RV3 20K 15 TURNS

267K R23 14K R24 JR2

1,3K R25

852nm
(455nm)

CS Photosensor

Hamamatsu 874/8K
or centronic OSD15

5% 1MΩ R27

2,2MΩ 5% R28

C8 polyc. 0,068µF

U4 V+ V- RV1 10K C9 C10 2x0,1µF polyc. -9V

1,5 mmol/L = -4,23V

463K R32

182K R29 47,5K R30 JR1 A B

RV2 20K 15 TURNS cw

2,1K R31

DG 508 U5

SEL Ø SEL 1 SEL 2

J3 2 J3 4 J3 6

JR7

R33 10K 5% → +15V

1nF policarb. C11

499K R34 499K R35

C12 33pF polyst.

U6 Lm301A

TP 5

-15V R37 41,2K R38 1,78K

J3 10-11 Analog input

Ø = 621 mV

R36 33K 5%

+15V -15V

NOTE : 1. The jumpers JR1-2-3-4 are shown in the most likely position.
The final position is fixed during the card testing.
2. All resistors are 1% 1/4W unless otherwise specified.

| | U1-U2-U4 | RV9-8-1 | C2-3-5 6-9-10 | R39 R40 | CR1 CR2 | V+ | V- |
|---|---|---|---|---|---|---|---|
| 1st version | ICL 7650 | NO | YES | YES | YES | +5,6V | -9V |
| 2nd version | AD 3731 | YES | NO | SHORT CIRCUIT | NO | +15V | -15V |

15-16-17 J3 +15V 20V Tant. 15µF TP 6 1/2W 5% 270Ω R39 (5.6V Zener 0.5watt) BZX79 C5V6 CR1 V+

C13 C15 cer. 0,1µF C17 ceram. 0,1µF

1-3-5-7 8-9-12-13 J3 TP 8 C14 C16 cer. 0,1µF 1N936 0,1µF ceram. ANA GND

-15V J3 18-19-20 20V 15µF Tant. TP 7 220Ω 1/2W 5% R40 CR2 C18 V-

(9V Zener diode)

**Instrumentation Laboratory**

PREAMPLIFIER SUB-UNIT SCHEMATIC

82079-00

18

| ITEM | CODE | DESCRIPTION | Qty | [illegible] | Assy | NOTES |
|---|---|---|---|---|---|---|
| 1 | 71163 - 03 | Fabrication board printer interconn | 1 | [illegible] | | |
| 2 | 71991 - 02 | Printer interconn flat cable assy | 1 | [illegible] | X | |
| 3 | 73617 - 05 | Berg header right 5pin | 1 | S | | P29 |
| | | | | | | |
| | | | | | | |
| | | | | | | |

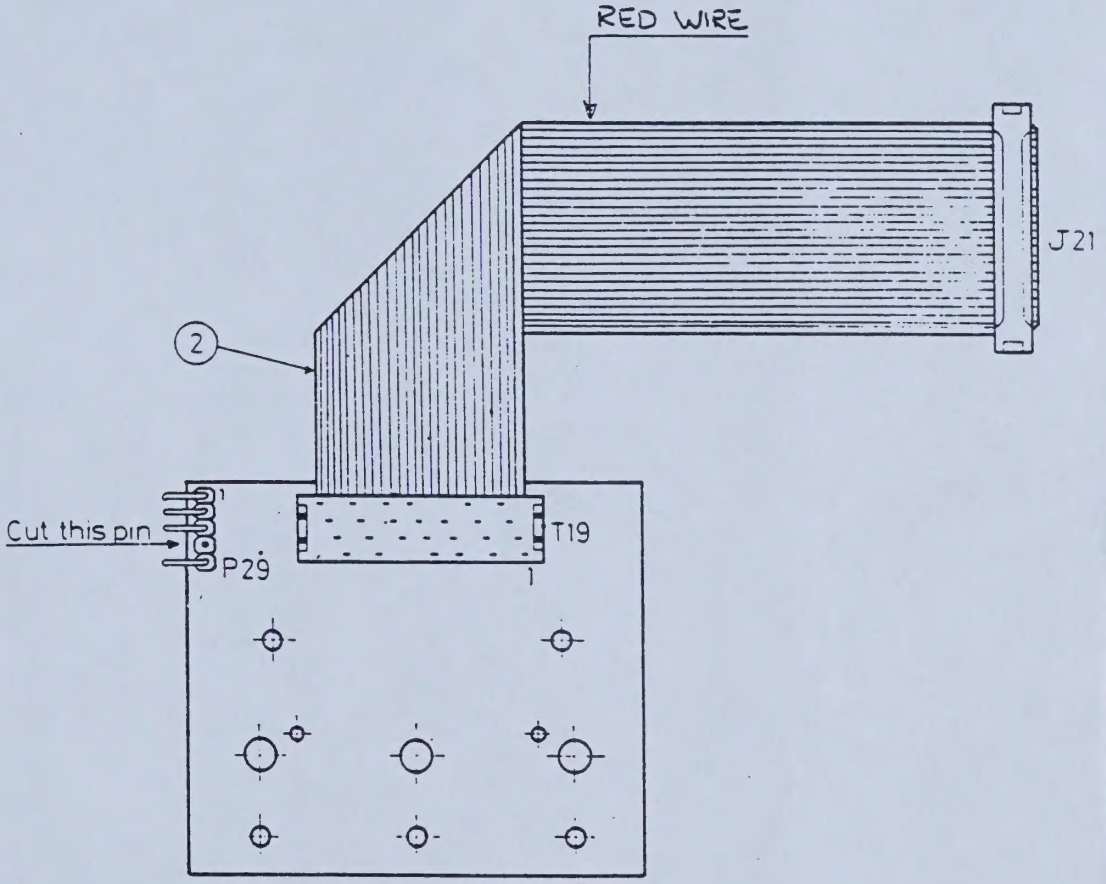


• THIS DOCUMENT CONTAINS PROPRIETARY INFORMATION OF INSTRUMENTATION LABORATORY SPA (IL) NONE OF WHICH SHALL BE COPIED, DISCLOSED OR USED IN WHOLE OR IN PART FOR ANY PURPOSE WITHOUT WRITTEN PERMISSION OF IL THIS DOCUMENT IS SUBJECT TO RECALL BY IL AT ANY TIME •

Instrumentation Laboratory

PRINTER INTERCONNECTION BOARD ASSY

84985-00

19

OUT PIN 14 FLUSH THE CONNECTOR

Solder C11 leads by hand after tightening clamp

Before mounting P20 void pins

TRANSISTOR PAD 15 PLACES

cut off flush with conn PIN 46 before mounting

cut off flush with conn PIN 28 before mounting

Sect A-A Scale none

Sect B-B Scale none

Sect C-C Scale none

Notes

1) All screws must be mounted before soldering

• THIS DOCUMENT CONTAINS PROPRIETARY INFORMATION OF INSTRUMENTATION LABORATORY SPA (IL) NONE OF WHICH SHALL BE COPIED DISCLOSED OR USED IN WHOLE OR IN PART FOR ANY PURPOSE WITHOUT WRITTEN PERMISSION OF IL THIS DOCUMENT IS SUBJECT TO RECALL BY IL AT ANY TIME •

Instrumentation Laboratory

PRINTER SAMPLER BOARD ASSY

84980-00

20

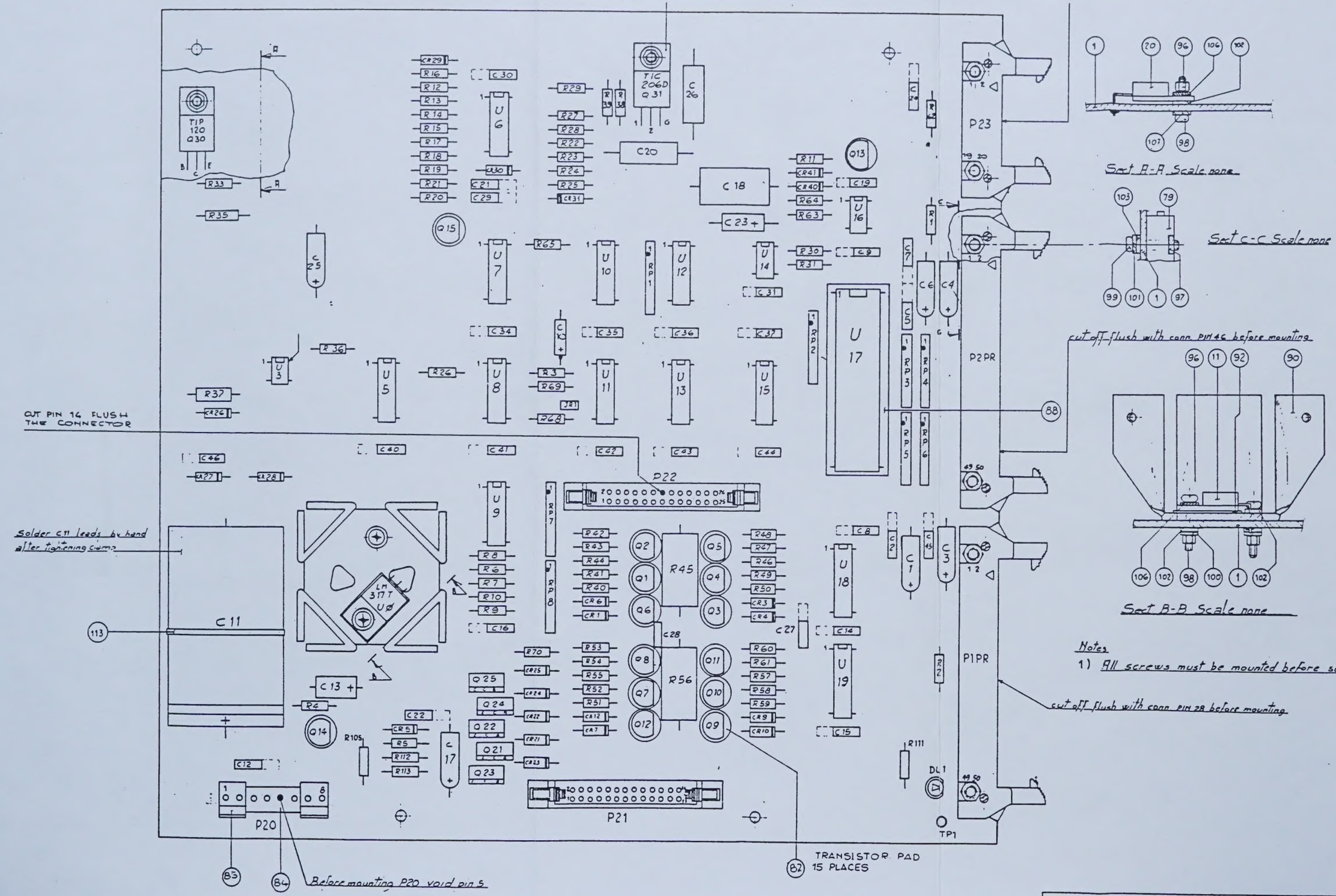


Notes

1) All screws must be mounted before soldering

- THIS DOCUMENT CONTAINS PROPRIETARY INFORMATION OF INSTRUMENTATION LABORATORY SPA (IL) NONE OF WHICH SHALL BE COPIED DISCLOSED OR USED IN WHOLE OR IN PART FOR ANY PURPOSE WITHOUT WRITTEN PERMISSION OF IL THIS DOCUMENT IS SUBJECT TO RECALL BY IL AT ANY TIME -

Instrumentation Laboratory

PRINTER SAMPLER BOARD ASSY

84980-00

20

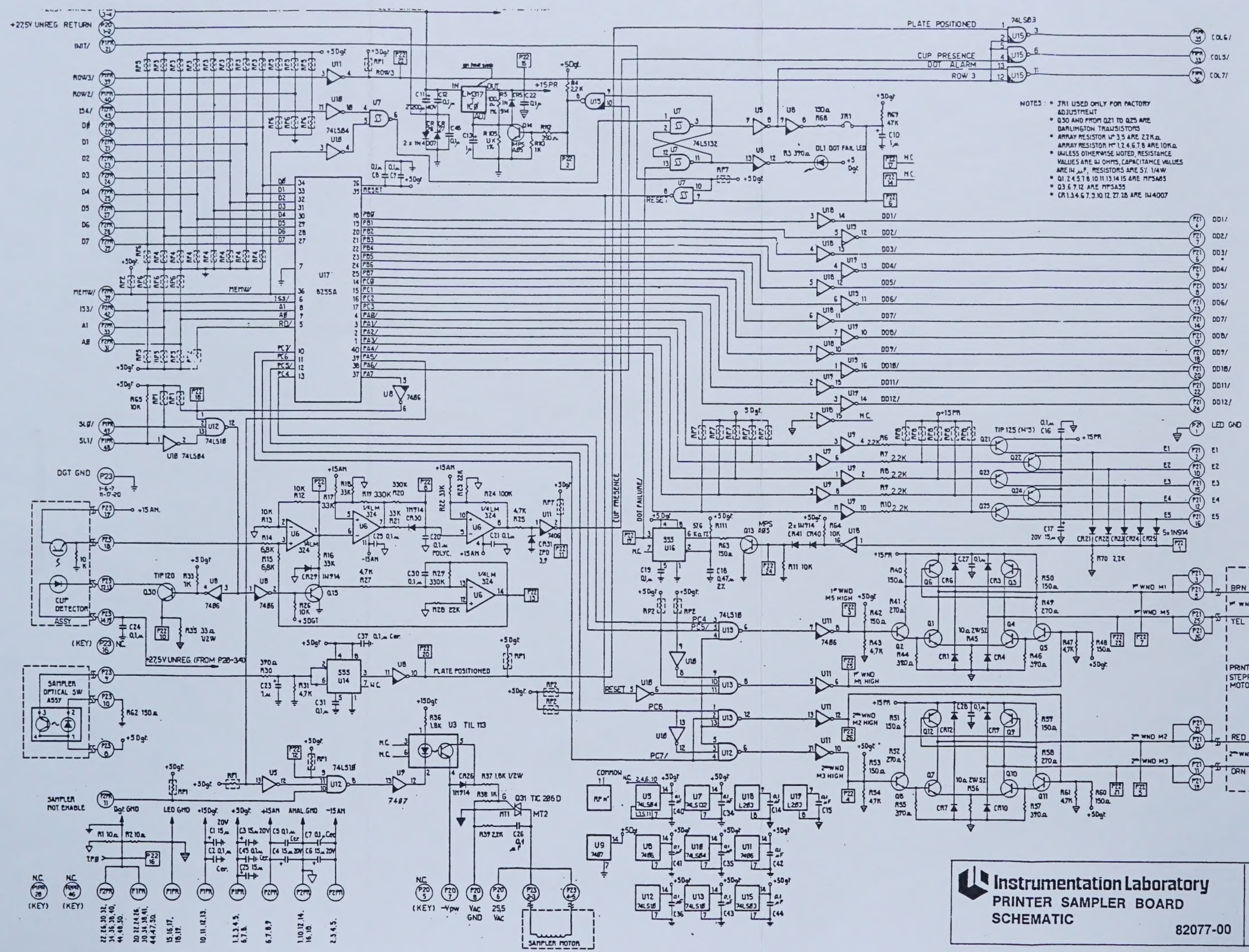


NOTES:
- JR1 USED ONLY FOR FACTORY ADJUSTMENT
- Q30 AND FROM Q21 TO Q25 ARE DARLINGTON TRANSISTORS
- ARRAY RESISTOR N° 3,5 ARE 2,2 KΩ
  ARRAY RESISTOR N° 1,2,4,6,7,8 ARE 10KΩ
- UNLESS OTHERWISE NOTED, RESISTANCE VALUES ARE Ω OHMS, CAPACITANCE VALUES ARE IN μF, RESISTORS ARE 5% 1/4W
- Q1,2,4,5,7,8,10,11,13,14,15 ARE MPSA85
- Q3,6,9,12 ARE MPSA55
- CR1,3,4,6,7,9,10,12,27,28 ARE 1N4007


* THIS DOCUMENT CONTAINS PROPRIETARY INFORMATION OF INSTRUMENTATION LABORATORY SPA (IL). NONE OF WHICH SHALL BE COPIED, DISCLOSED OR USED IN WHOLE OR IN PART FOR ANY PURPOSE WITHOUT WRITTEN PERMISSION OF IL. THIS DOCUMENT IS SUBJECT TO RECALL BY IL AT ANY TIME.


Instrumentation Laboratory
PRINTER SAMPLER BOARD
SCHEMATIC
82077-00

| ITEM | P/N | DESCRIPTION | QTY | | | NOTES |
|---|---|---|---|---|---|---|
| 1 | 71199 - 01 | Fabricated board | 1 | A | | |
| 2 | 71991 - 01 | Assy sampler interconn. flat cable | 1 | A | X | |
| 3 | 67641 - 01 | Molex male connector w.t.r. 2p. | 1 | S | | P26 |
| 4 | 73618 - 04 | Berg male connector 4p. | 1 | S | | P27 |
| 5 | 73618 - 05 | Berg male connector 5p. | 1 | S | | P28 |
| 6 | 96388 - 49 | Resistor 10Kn. 1/4W 5% | 1 | S | | |
| 7 | 69944 - 04 | Clamp Panduit | 1 | S | | |

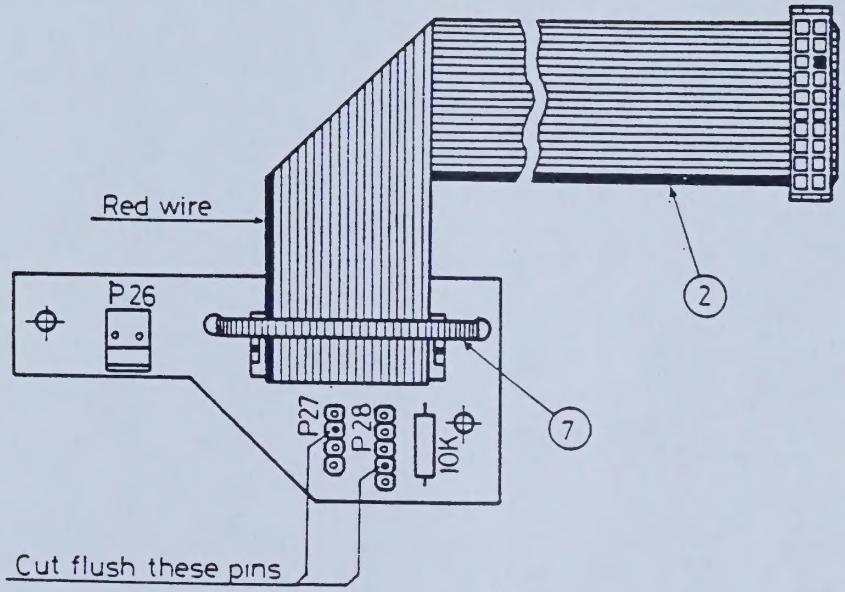


• THIS DOCUMENT CONTAINS PROPRIETARY INFORMATION OF INSTRUMENTATION LABORATORY SPA (IL). NONE OF WHICH SHALL BE COPIED, DISCLOSED OR USED IN WHOLE OR IN PART FOR ANY PURPOSE WITHOUT WRITTEN PERMISSION OF IL. THIS DOCUMENT IS SUBJECT TO RECALL BY IL AT ANY TIME •

| ITEM | CODE | DESCRIPTION | Q.ty | ASSY | | NOTES |
|---|---|---|---|---|---|---|
| 1 | 82477-00 | BRACKET MOTOR ASSY | 1 | A | X | 11511-12 |
| 2 | 95045-01 | SAMPLER MOTOR ASSY | 1 | A | X | 11509-63 |
| 3 | 95225-00 | GEAR ASSY | 1 | A | X | 11511-55 |
| 4 | 84986-00 | SAMPLER OPTICAL SWITCH R.O. ASSY | 1 | A | X | |
| 5 | 90169-04 | PAN HEAD SCREW M3x8 | 4 | S | | |
| 6 | 90764-04 | LOCK WASHER SPLIT I.D. 3.2 | 4 | S | | |
| 7 | 90763-05 | WASHER FLAT I.D. 3.2 | 2 | S | | |

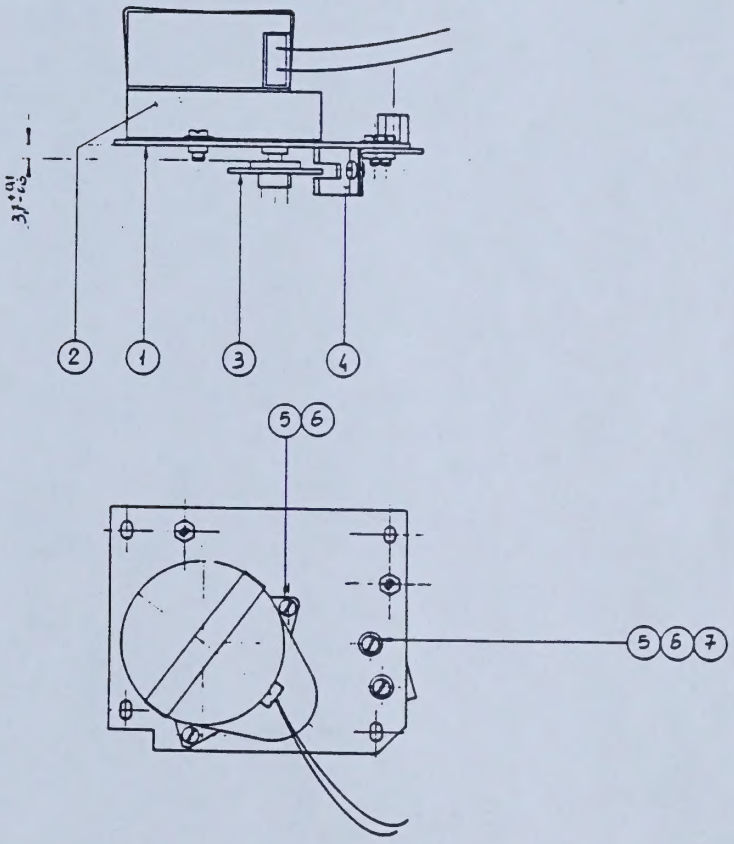


- THIS DOCUMENT CONTAINS PROPRIETARY INFORMATION OF INSTRUMENTATION LABORATORY SPA (IL). NONE OF WHICH SHALL BE COPIED, DISCLOSED OR USED IN WHOLE OR IN PART FOR ANY PURPOSE WITHOUT WRITTEN PERMISSION OF IL. THIS DOCUMENT IS SUBJECT TO RECALL BY IL AT ANY TIME -

•THIS DOCUMENT CONTAINS PROPRIETARY INFORMATION OF INSTRUMENTATION LABORATORY SPA (IL). NONE OF WHICH SHALL BE COPIED, DISCLOSED OR USED IN WHOLE OR IN PART FOR ANY PURPOSE WITHOUT WRITTEN PERMISSION OF IL. THIS DOCUMENT IS SUBJECT TO RECALL BY IL AT ANY TIME.•

S.B.C.

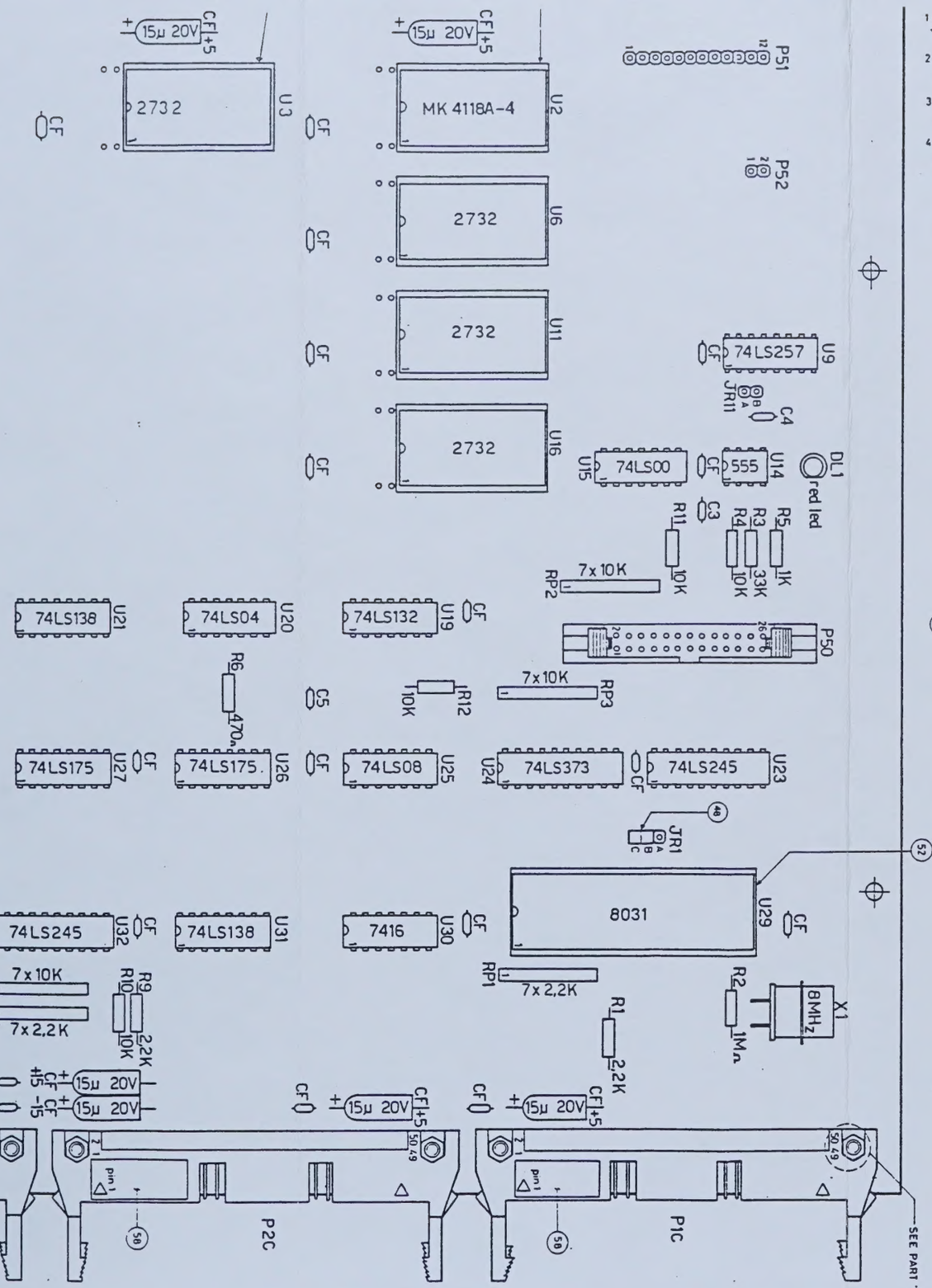


(51) Components side view

1. CAPACITORS C3, C4, C5 AND UNMARKED CF ARE CERAMIC 0,1µF 50V.
2. ALL RESISTORS ARE 1/4W 5% UNLESS OTHERWISE SPECIFIED.
3. PIN 1 OF THE CONNECTORS P1C, P2C AND P3 IS INDICATED BY THE ARROW ON THE LABEL (pos 58)
4. TO POLARIZE THE CONNECTORS, CUT PIN 43 OF P1C, PIN 11 OF P2C AND PIN 14 OF P3

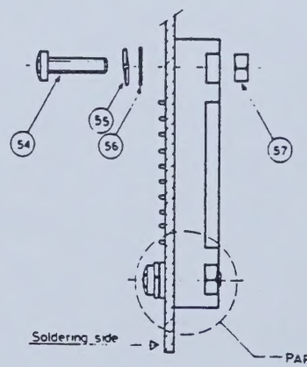


| | | | | | |
|---|---|---|---|---|---|
| 4 | 66760-00 | " " 74LS04 | 1 | S | U20 |
| 5 | 73609-00 | " " 74LS08 | 1 | S | U25 |
| 6 | 66779-00 | " " 7416 | 1 | S | U30 |
| 7 | 66761-00 | " " 74LS132 | 1 | S | U19 |
| 8 | 73620-00 | " " 74LS138 | 2 | S | U21-U31 |
| 9 | 71707-00 | " " 74LS175 | 2 | S | U26-U27 |
| 10 | 71721-00 | " " 74LS245 | 2 | S | U23-U32 |
| 11 | 73616-00 | " " 74LS257 | 1 | S | U9 |
| 12 | 71722-00 | " " 74LS373 | 1 | S | U24 |
| 13 | " | | | | |
| 14 | | | | | |
| 15 | 71724-00 | " " 8031 | 1 | S | U29 |
| 16 | 71723-00 | " " AD574JD | 1 | S | U28 |
| 17 | 71729-00 | " " MK4118A-4 | 1 | S | U2 |
| 18 | 37382-00 | " " 555 | 1 | S | U14 |
| 19 | | | | | |
| 20 | 68265-01 | Red led H.P. | 1 | S | DL1 |
| 21 | 69452-03 | XTAL 8MHz | 1 | S | X1 |
| 22 | | | | | |
| 23 | 96444-02 | S.I.P. resistor 7 x 2,2Kn | 2 | S | RP1-RP4 |
| 24 | 96444-03 | " " 7 x 10Kn | 3 | S | RP2-RP3-RP5 |
| 25 | | | | | |
| 26 | 95380-01 | Resistor 49,9n 1/4W 1% | 1 | S | R7 |
| 27 | 96388-31 | Resistor 330n 1/4W 5% | 1 | S | R6 |
| 28 | 96388-37 | " 1Kn " " | 1 | S | R5 |
| 29 | 96388-41 | " 2,2Kn " " | 2 | S | R1-R9 |
| 30 | 96388-49 | " 10Kn " " | 4 | S | R4-R10-R11-R12 |
| 31 | 96388-63 | " 150Kn " " | 1 | S | R3 |
| 32 | 96388-73 | " 1Mn " " | 1 | S | R2 |
| 33 | | | | | |
| 34 | 67251-10 | POLICARB CAP 47nF 160V | 1 | | C3 |
| 35 | 67327-02 | Ceramic capacitor 0,1µF 50V | 23 | S | -C4-C5-CF |
| 36 | 67331-01 | Tantalum capacitor 15µF 20V | 6 | S | CF |
| 37 | | | | | |
| 38 | | | | | |
| 39 | 70300-01 | 3M male connector 90° 50p. | 2 | S | P1C-P2C |
| 40 | 70300-02 | " " " " 20p. | 1 | S | P3 |
| 41 | 70259-00 | " " " straight 26p. | 1 | S | P50 |
| 42 | | | | | |
| 43 | 73618-01 | Berg male connector 1p. | 1 | S | JR13 |
| 44 | 73618-02 | " " " 2p. | 2 | S | P52-JR11 |
| 45 | 73618-03 | " " " 3p. | 2 | S | JR1-JR13 |
| 46 | 73618-12 | " " " 12p. | 1 | S | P51 |
| 47 | | | | | |
| 48 | 70299-00 | Berg mini jump | 2 | S | |
| 49 | | | | | |
| 50 | 95713-08 | Socket 24 pin | 5 | S | |
| 51 | 95713-09 | " 28 pin | 1 | S | |
| 52 | 95713-12 | " 40 pin | 1 | S | |
| 53 | | | | | |
| 54 | 99586-04 | Screw M 2,5 x 0,45 L-10mm | 6 | S | |
| 55 | 96764-03 | Washer grower i.d. 2,8mm | 6 | S | |
| 56 | 96763-04 | Flat washer i.d 2,8mm | 6 | S | |
| 57 | 68060-03 | Nut M 2,5 x 0,45 | 6 | S | |
| 58 | 71810_00 | Label for flat cable connector | 3 | A4 | |
| 59 | | | | | |
| 60 | 82076.00 | Schematic | ref | A | |
| 61 | | | | | |
| 62 | 70726-01 | PROM 2732 PROGRAMMED | 1 | | U16 |
| 63 | 70726-02 | PROM 2732 PROGRAMMED | 1 | | U11 |
| 64 | 70726-03 | PROM 2732 PROGRAMMED | 1 | | U6 |
| 65 | 70726-04 | PROM 2732 PROGRAMMED | 1 | | U3 |
| 66 | 84005-01 | TEST PROC. S.B.C 94.1 | REF. | S | |

**Instrumentation Laboratory**
SINGLE BOARD COMPUTER ASSY
84977-00

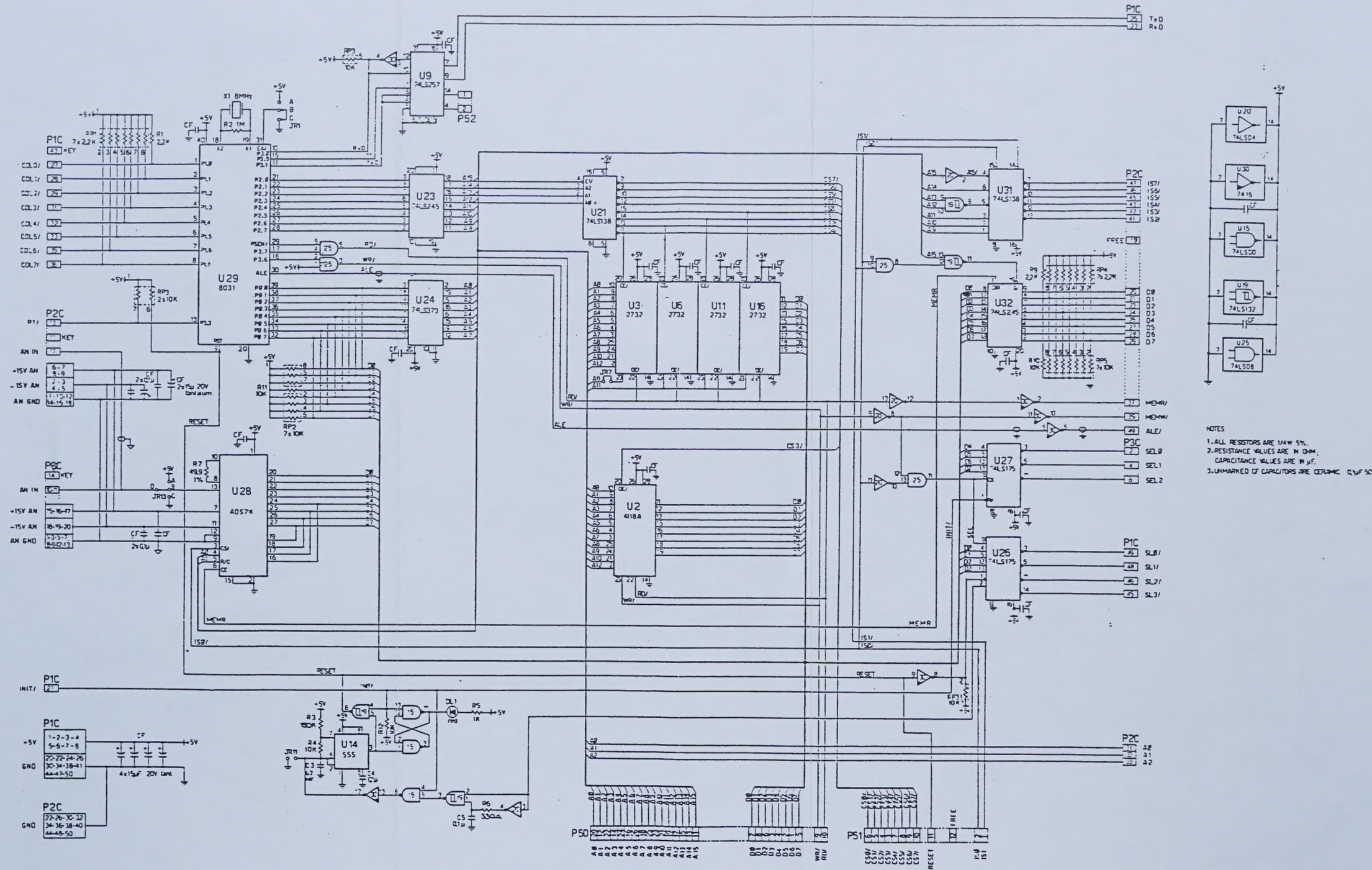


NOTES

1. ALL RESISTORS ARE 1/4W 5%.
2. RESISTANCE VALUES ARE IN OHM. CAPACITANCE VALUES ARE IN µF.
3. UNMARKED CF CAPACITORS ARE CERAMIC 0.1µF 50V

Instrumentation Laboratory

SINGLE BOARD COMPUTER SCHEMATIC

82076-00

25

| ITEM | CODE | DESCRIPTION | Q.ty | ASSY | NOTES |
|---|---|---|---|---|---|
| 1 | 95042-01 | MOTOR ASSY | 1 | 1 ST | 11523-95 |
| 2 | 95042-02 | MOTOR SUPPORT ASSY | 1 | 1 ST | 11523-94 |

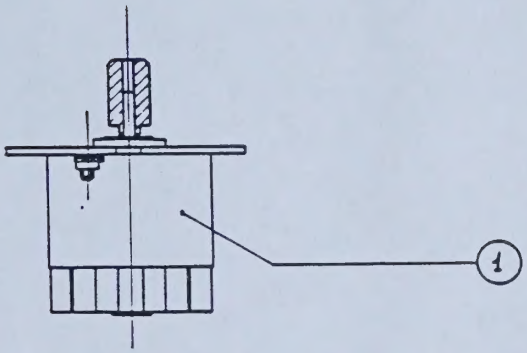


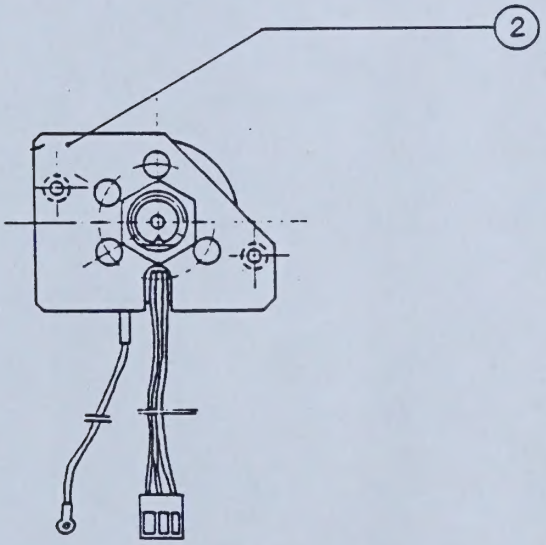


• THIS DOCUMENT CONTAINS PROPRIETARY INFORMATION OF INSTRUMENTATION LABORATORY SPA (IL). NONE OF WHICH SHALL BE COPIED, DISCLOSED OR USED IN WHOLE OR IN PART FOR ANY PURPOSE WITHOUT WRITTEN PERMISSION OF IL. THIS DOCUMENT IS SUBJECT TO RECALL BY IL AT ANY TIME •

Instrumentation Laboratory

SPINNING CUP MOTOR ASSY

95042-00

| ITEM | CODE | DESCRIPTION | Qty | S | ASSY | NOTES |
|---|---|---|---|---|---|---|
| 1 | 71561-00 | KNOB ASSY | 1 | A3 | X | 11510-27 |
| 2 | 82327-00 | NEEDLE SUPPORT | 1 | A4 | | 11510-15 |
| 3 | 65182-00 | SAMPLE PROBE BODY ASSY | 1 | A1 | X | |
| 4 | 97759-00 | PIN ASSY | 1 | A3 | X | 11510-03 |
| 5 | 66053-00 | BUSHING | 2 | A6 | | 11510-14 |
| 6 | | | | | | |
| 7 | 65331-06 | SEEGER | 1 | S | | |
| 8 | 96806-00 | DELRIN WASHER | 3 | A4 | | 11523-67 |
| 9 | 99627-02 | SOCKET SET SCREW M4x6 | 2 | S | | |
| 10 | 95054-00 | HUB ASSY | 1 | A3 | X | 11510-06 |
| 11 | 96807-00 | BELT STRETCHER WASHER | 2 | A6 | | 11523-70 |
| 12 | 68556-00 | ECCENTRIC | 2 | A4 | | 11523-69 |
| 13 | 66674-01 | COGGED RUBBER BELT | 1 | S | | |
| 14 | 99588-04 | C.S.B.H. SCREW M3x8 | 2 | S | | |
| 15 | 96763-05 | WASHER FLAT I.D. 3.2 | 2 | S | | |
| 16 | | | | | | |
| | 84005-45 | MOUNTING PROCEDURE TIP ASSY | REF | S | | |

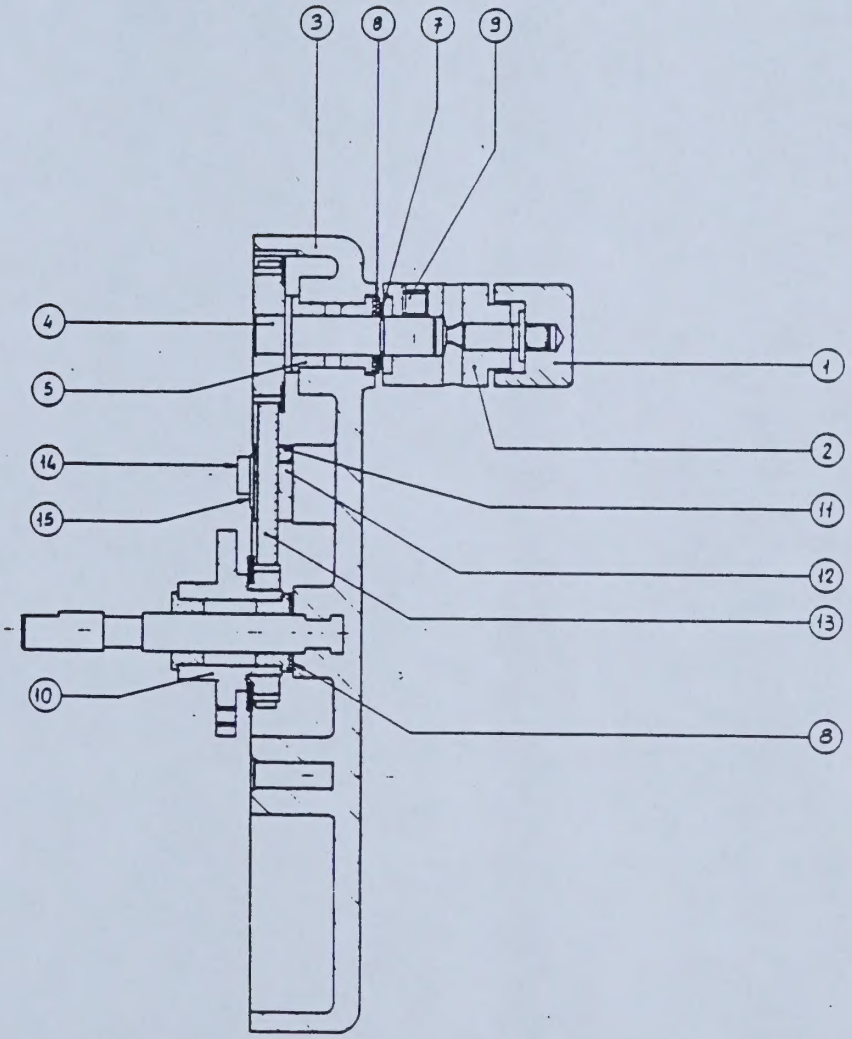


"THIS DOCUMENT CONTAINS PROPRIETARY INFORMATION OF INSTRUMENTATION LABORATORY SPA (IL). NONE OF WHICH SHALL BE COPIED DISCLOSED OR USED IN WHOLE OR IN PART FOR ANY PURPOSE WITHOUT WRITTEN PERMISSION OF IL. THIS DOCUMENT IS SUBJECT TO RECALL BY IL AT ANY TIME."

Instrumentation Laboratory

SAMPLE PROBE ASSY

65184-00

27

| ITEM | CODE | DESCRIPTION | QTY | A1 | A2 | A3 | A4 | S | NOTES |
|---|---|---|---|---|---|---|---|---|---|
| 1 | 97459-00 | THRUST ELECTROMAGNET ASST | 1 | | | I | | | 1150-13 |
| 2 | 62330-00 | ELECTROMAGNET SUPPORT | 1 | | | | I | | 1152-51 |
| 3 | 66107-00 | ASST LEVER ARM | 1 | | | I | | | 1150-43 |
| 4 | 95445-00 | LEVER ARM PIVOT | 1 | | | | I | | 1150-32 |
| 5 | 97760-00 | ELECTROMAGNET PIN | 1 | | | | I | | 1150-53 |
| 6 | 65331-04 | SEEGER RETAINER RING | 4 | | | | | S | |
| 7 | 99588-04 | C.S.B.H. SCREW M3x10 | 2 | | | | | S | |
| 8 | 96763-05 | WASHER FLAT I.D. 3.2 | 2 | | | | | S | |
| 9 | 96764-04 | LOCK WASHER SPLIT I.D. 3.2 | 1 | | | | | S | |
| 10 | 96735-05 | WASHER FLAT NYLON I.D. 3.2 | 2 | | | | | S | |
| 11 | 96760-03 | WASHER EXTERNAL LOCK I.D. 3.2 | 1 | | | | | S | |
| 12 | 71994-00 | GND CABLE II" ASST | 1 | | | | I | | |
| | | | | | | | | | |
| | | | | | | | | | |
| | | | | | | | | | |
| | | | | | | | | | |
| | | | | | | | | | |
| | 84005-44 | MOUNTING PROCEDURE PROBE ELECTR. ASST | REF | | | | | S | |

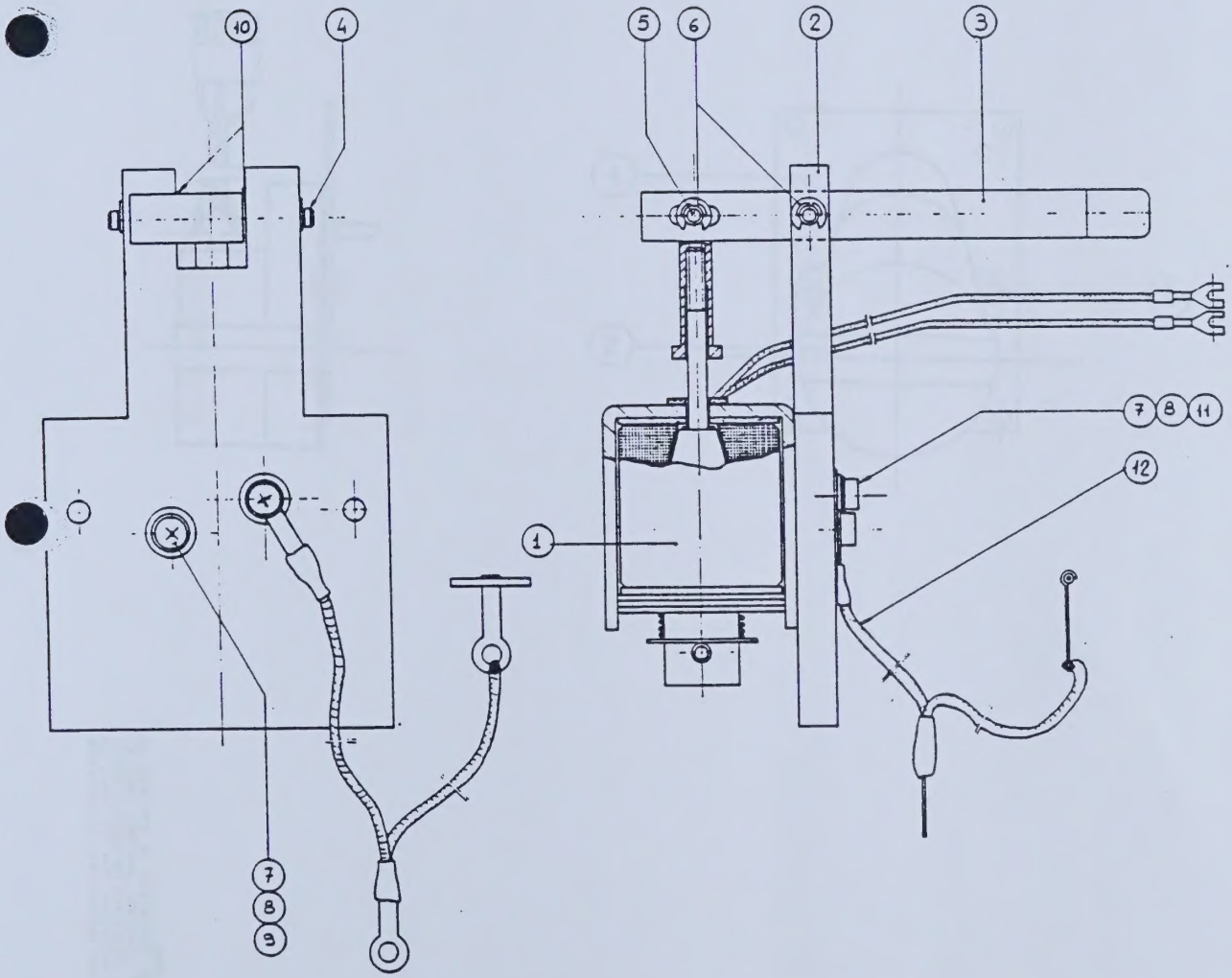


Instrumentation Laboratory

TIP ELECTROMAGNET ASSY

82204-00

28

| ITEM | CODE | DESCRIPTION | Qty | ASSY | NOTES |
|---|---|---|---|---|---|
| 1 | 95039-00 | MOTOR SUPPORT ASSY | 1 | A | 11510-17 |
| 2 | 95041-01 | TIP MOTOR ASSY | 1 | A | 11502-A0 |
| 3 | 99588-03 | SCREW M3X0,5 L=6 | 2 | S | |

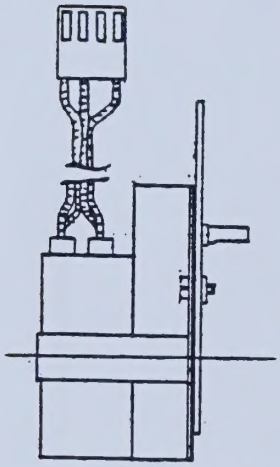

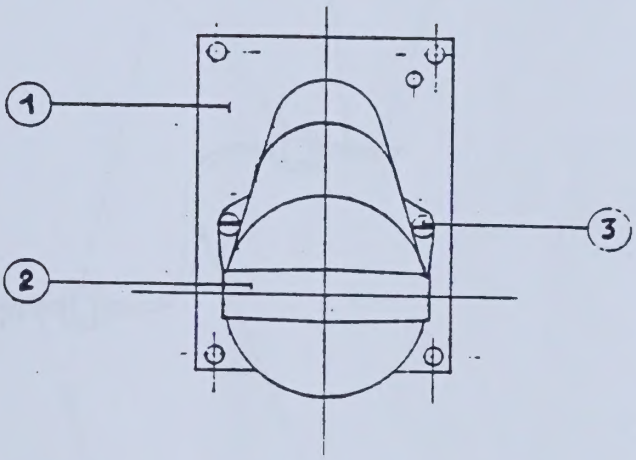


• THIS DOCUMENT CONTAINS PROPRIETARY INFOHMATION OF INSTRUMENTATION LABORATORY SPA (IL) NONE OF WHICH SHALL BE COPIED, DISCLOSED OR USED IN WHOLE OR IN PART FOR ANY PURPOSE WITHOUT WRITTEN PERMISSION OF IL. THIS DOCUMENT IS SUBJECT TO RECALL BY IL AT ANY TIME •

| ITEM | CODE | DESCRIPTION | Q.ty | | ASY | NOTES |
|---|---|---|---|---|---|---|
| 1 | 66931-00 | CAPILLARY HOLDER GAS | 1 | A | X | ES-11485-07 |
| 2 | 99046-01 | GAS TUBE Ø1,6x0,8 L=65mm | 1 | A | | ES-11485-09 |
| 3 | 22672-00 | NUT GAS TUBE | 2 | S | | |
| 4 | 57343-00 | FERRULE REAR FUEL LINE | 2 | S | | |
| 5 | 57344-00 | FERRULE FRONT FUEL LINE | 2 | S | | |
| 6 | 6253-09 | O-RING | 1 | S | | |

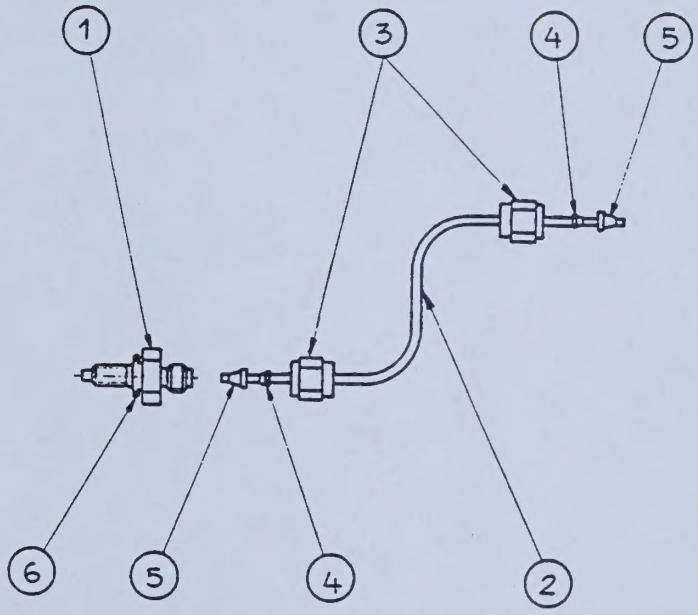


- THIS DOCUMENT CONTAINS PROPRIETARY INFORMATION OF INSTRUMENTATION LABORATORY SPA (IL). NONE OF WHICH SHALL BE COPIED, DISCLOSED OR USED IN WHOLE OR IN PART FOR ANY PURPOSE WITHOUT WRITTEN PERMISSION OF IL. THIS DOCUMENT IS SUBJECT TO RECALL BY IL AT ANY TIME -

Instrumentation Laboratory

TUBE GAS ASSY

99046-00

30

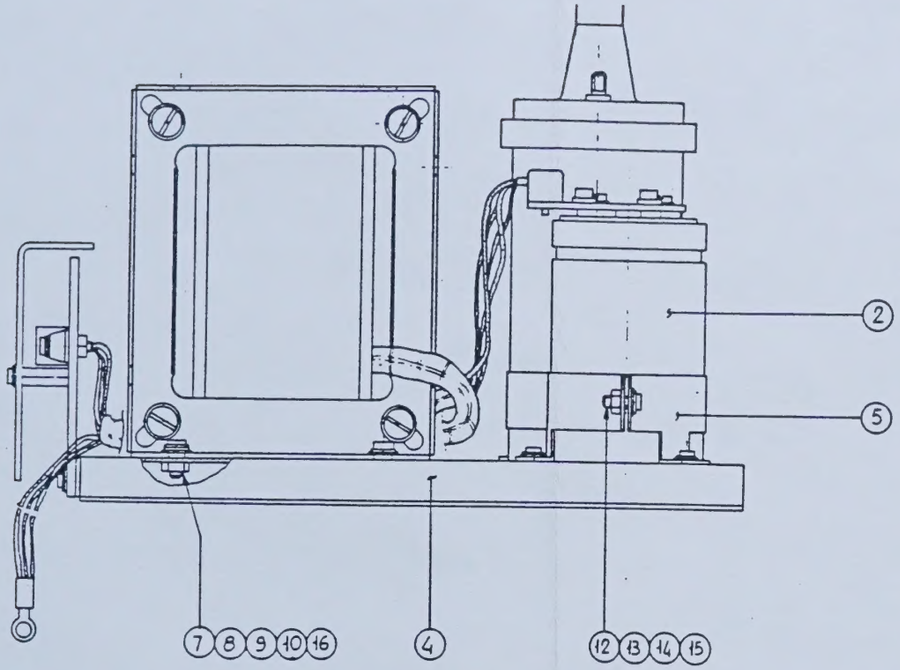


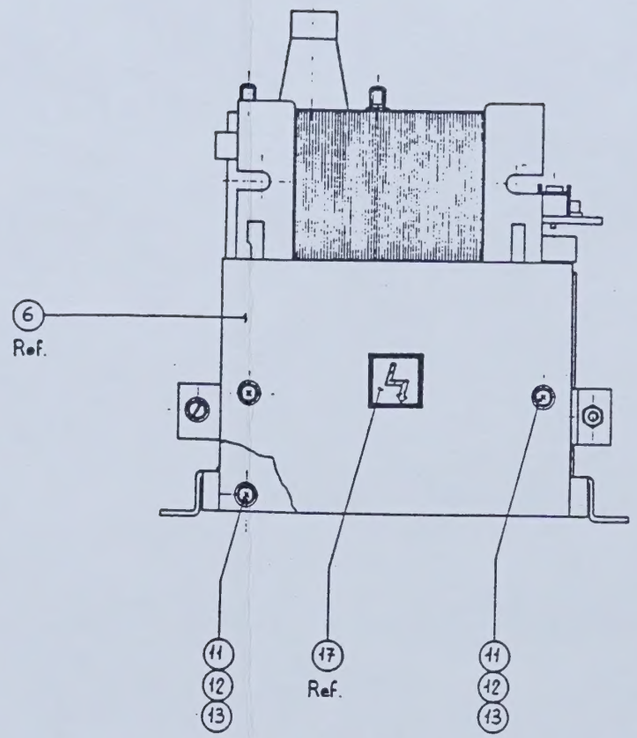


| ITEM | CODE | DESCRIPTION | Q.ty | |
|---|---|---|---|---|
| 1 | 70805-00 | HARNESS TRANSFORMER ASSY | 1 | |
| 2 | 84983-00 | RECTIFIER BOARD ASSY | 1 | |
| 3 | 23012 | COIL ASSY | 1 | |
| 4 | 70804-01 | TRANSFORMER SUPPORT | 1 | 2 |
| 5 | 56140 | CLAMP CAP HTG | 1 | S |
| 6 | 97250 | PLEXIGLASS PROTECTION | Ref. | 3 |
| 7 | 99589-04 | C.S.B.H. SCREW M4 L=12 | 4 | S |
| 8 | 96755-01 | WASHER FLAT I.D. 4.3 O.D. 16 | 4 | S |
| 9 | 96764-06 | LOCK WASHER SPLIT I.D. 4.3 | 4 | S |
| 10 | 68060-06 | NUT HEX. M4 | 4 | S |
| 11 | 99588-04 | C.S.B.H. SCREW M3 L=10 | 10 | S |
| 12 | 96763-05 | WASHER FLAT I.D. 3.2 | 11 | S |
| 13 | 96764-04 | LOCK WASHER SPLIT I.D. 3.2 | 11 | S |
| 14 | 99588-06 | P.H. SCREW M3 L=14 | 1 | S |
| 15 | 68060-05 | NUT HEX. M3 | 1 | S |
| 16 | 96765-05 | WASHER INTERNAL LOCK | 1 | S |
| 17 | 21785-00 | HIGH VOLTAGE LABEL | Ref. | 4 |
| | 84005-34 | MOUNTING PROCED TRANSF ASSY | REF | S |
| | 84005-35 | I.P.L FOR TRANSFORMER ASSY | REF | S |

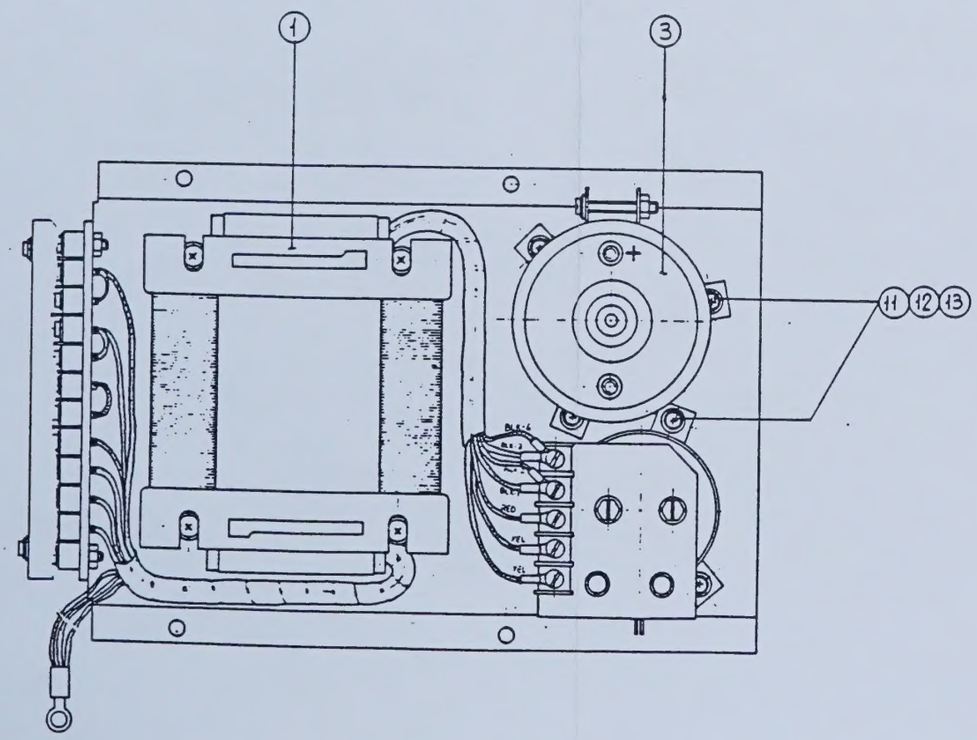


• THIS DOCUMENT CONTAINS PROPRIETARY INFORMATION OF INSTRUMENTATION LABORATORY SPA (IL). NONE OF WHICH SHALL BE COPIED, DISCLOSED OR USED IN WHOLE OR IN PART FOR ANY PURPOSE WITHOUT WRITTEN PERMISSION OF IL. THIS DOCUMENT IS SUBJECT TO RECALL BY IL AT ANY TIME •

| ITEM | CODE | DESCRIPTION | Qty | Ass |
|---|---|---|---|---|
| 1 | 71161-03 | Fabrication board rectifier | 1 | A |
| 2 | 57425-00 | Diode 1N4997 | 2 | S |
| 3 | 57356-03 | Diode pad | 2 | S |
| 4 | 66458-05 | Terminal strip 5 way | 1 | S |
| 5 | 38763-07 | WHASHER INTERNAL LOCK | 2 | S |
| 6 | 67319-04 | Electrol capacitor 22000 µF 25V | 1 | S |

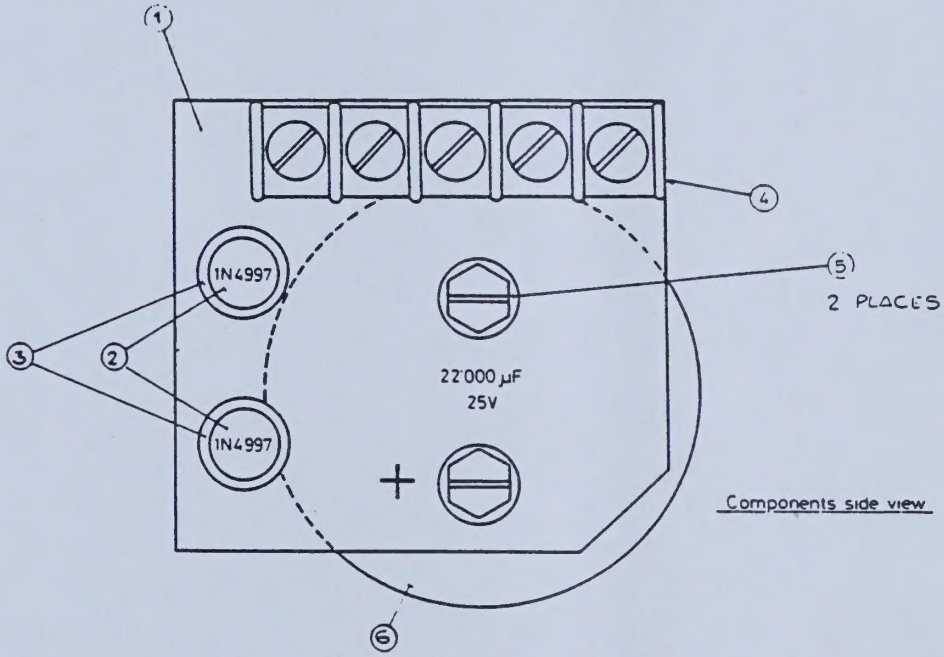


Components side view

* THIS DOCUMENT CONTAINS PROPRIETARY INFORMATION OF INSTRUMENTATION LABORATORY SPA (IL). NONE OF WHICH SHALL BE COPIED, DISCLOSED OR USED IN WHOLE OR IN PART FOR ANY PURPOSE WITHOUT WRITTEN PERMISSION OF IL. THIS DOCUMENT IS SUBJECT TO RECALL BY IL AT ANY TIME.

Instrumentation Laboratory

5 V DIGITAL RECTIFIER BOARD ASSY

84983-00

32

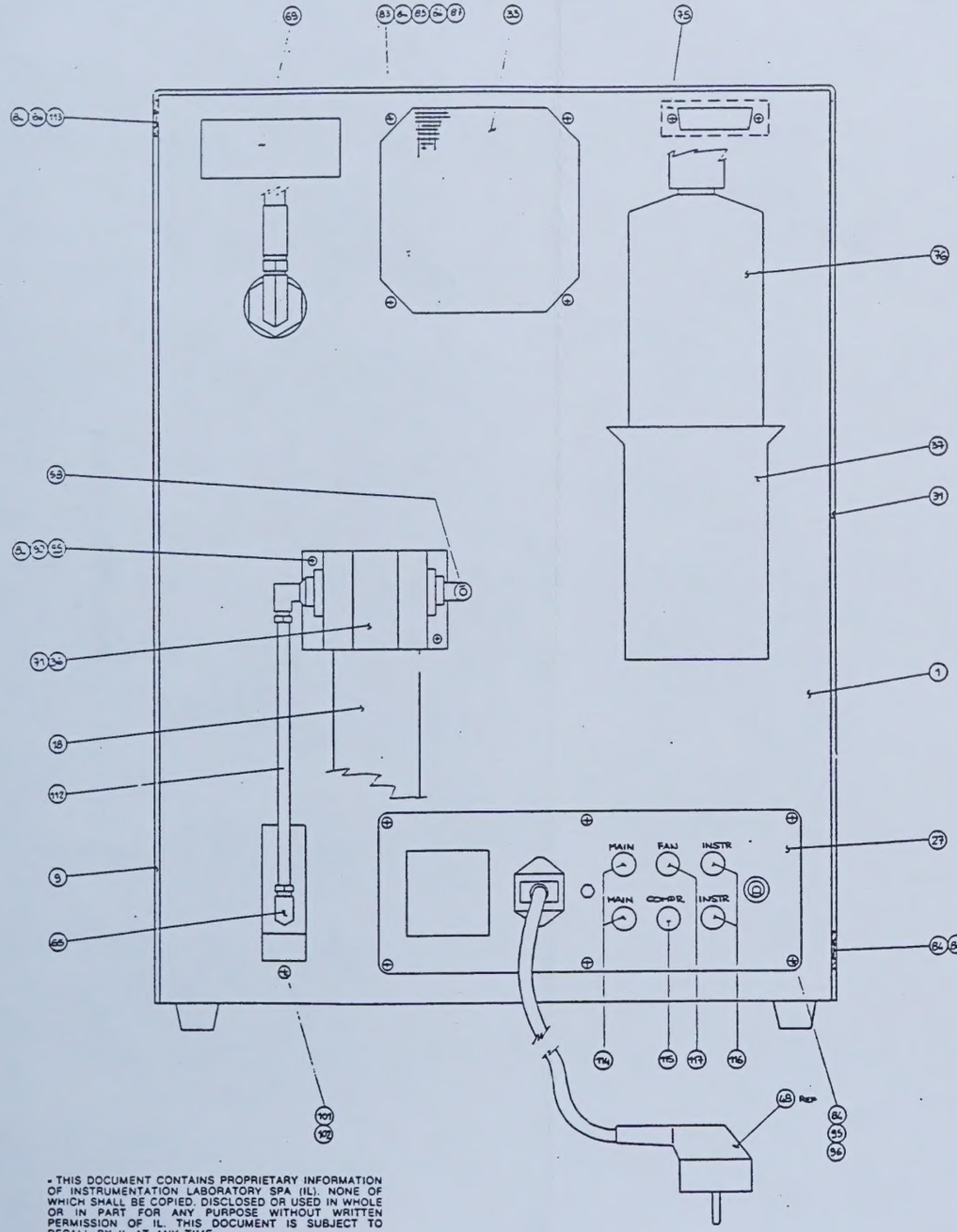


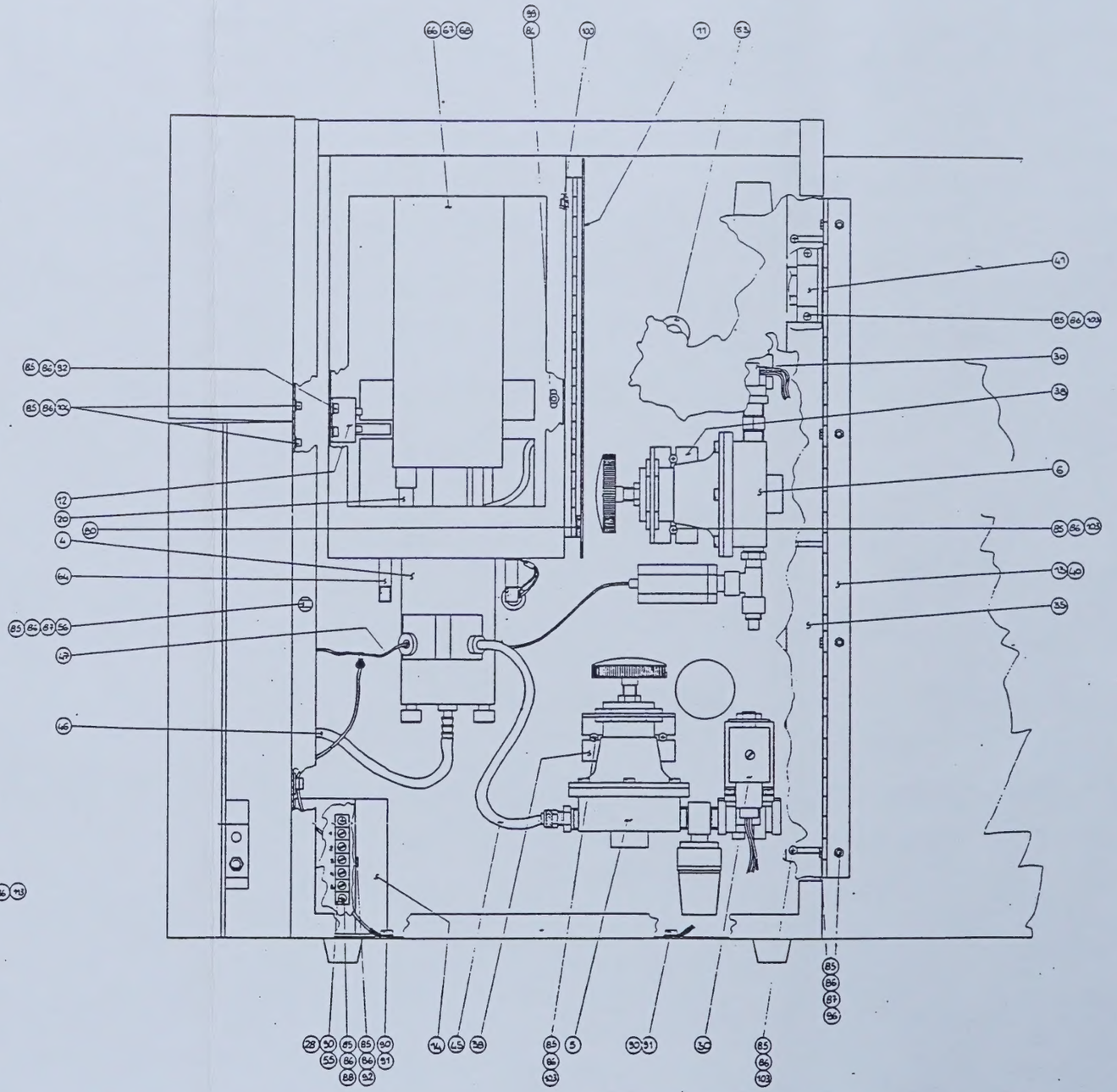

- THIS DOCUMENT CONTAINS PROPRIETARY INFORMATION OF INSTRUMENTATION LABORATORY SPA (IL). NONE OF WHICH SHALL BE COPIED, DISCLOSED OR USED IN WHOLE OR IN PART FOR ANY PURPOSE WITHOUT WRITTEN PERMISSION OF IL. THIS DOCUMENT IS SUBJECT TO RECALL BY IL AT ANY TIME -.

Instrumentation Laboratory

FINAL ASSY WITH PRINTER AND AUTOSAMPLER

70243

33

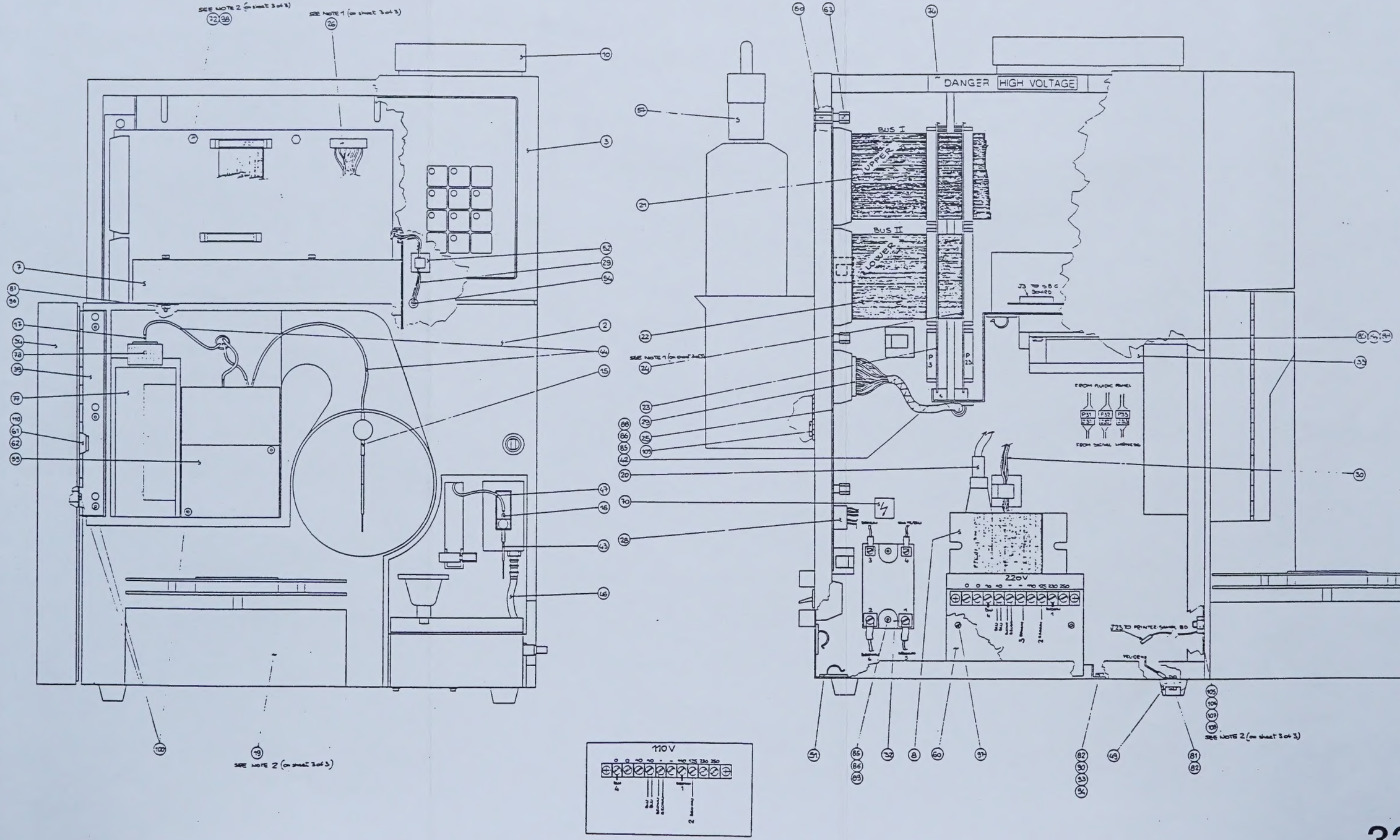
SEE NOTE 2 (on sheet 3 of 3)
SEE NOTE 1 (on sheet 3 of 3)
DANGER HIGH VOLTAGE
BUS I
UPPER
BUS II
LOWER
220V
110V
FROM FLUIDIC PANEL
TO PRINTER SWITCH BD
SEE NOTE 2 (on sheet 3 of 3)

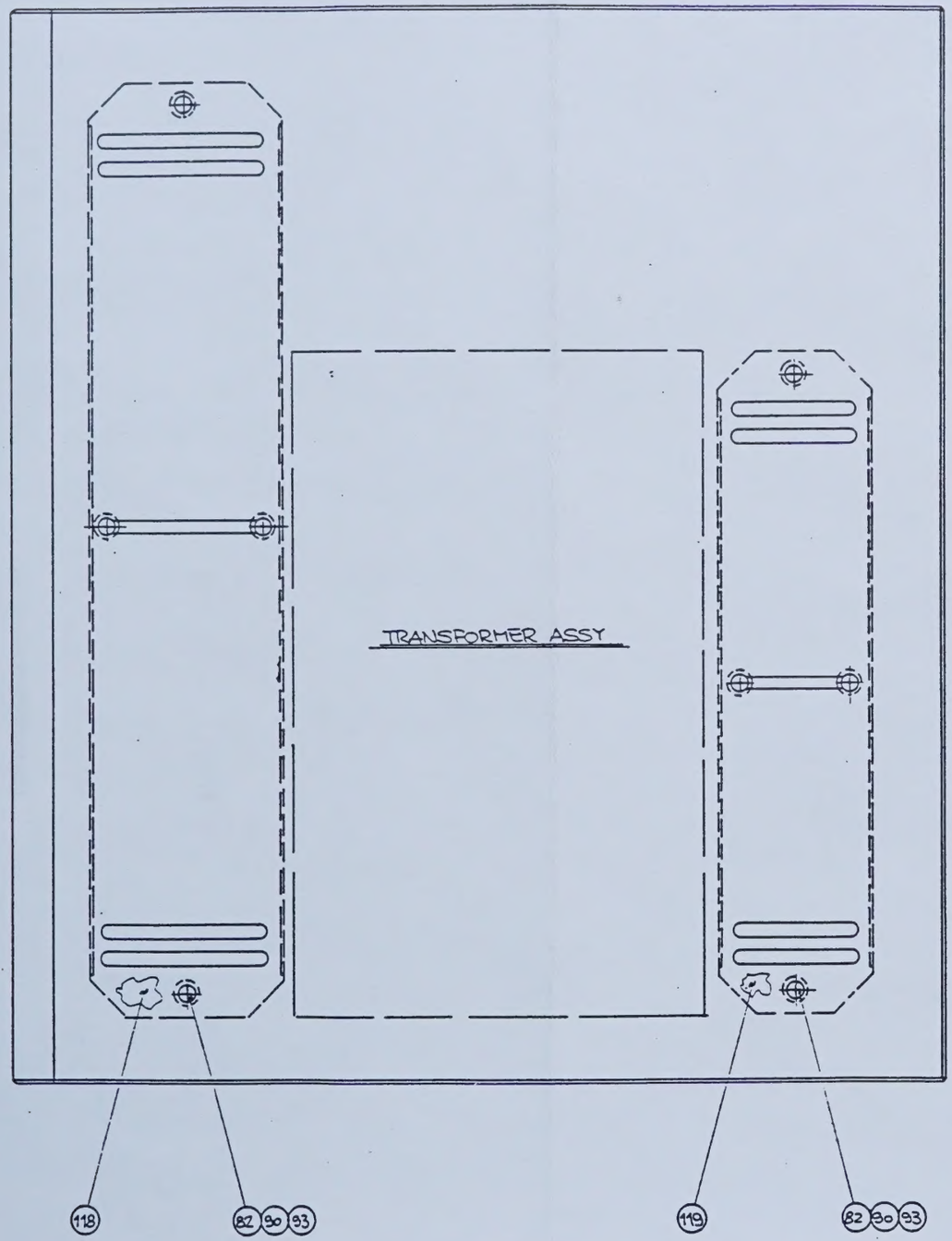


SEE NOTE 3

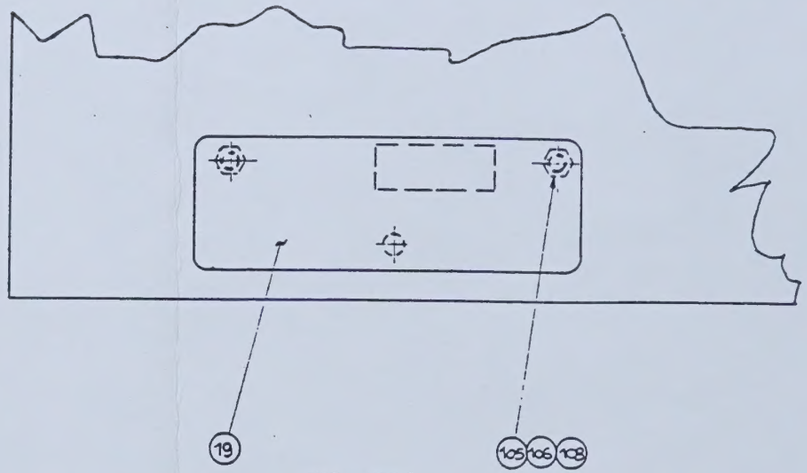


SEE NOTE 4

NOTES: 1) THIS ITEMS MUST BE MOUNTED ONLY IN THE FOLLOWING VERSIONS: 70243-00
70243-01
70243-03
70243-04
70243-06
70243-07

2) THIS ITEMS MUST BE MOUNTED ONLY IN THE FOLLOWING VERSIONS: 70243-00
70243-03
70243-06

3) THIS ITEMS MUST BE MOUNTED ONLY IN THE FOLLOWING VERSIONS: 70243-03
70243-04
70243-05

4) THIS ITEMS MUST BE MOUNTED ONLY IN THE FOLLOWING VERSIONS: 70243-01
70243-02
70243-04
70243-05
70243-07
70243-08

| ITEM | CODE | DESCRIPTION | QTY | | NOTES |
|---|---|---|---|---|---|
| 76 | 57000-00 | PROPANE FUEL UNIT GRADE CTL | 1 | S | |
| 77 | 96000-14 | BOTTLE | 1 | S | |
| 78 | 98186-01 | CAP HEADSTEM | 1 | S | |
| 79 | | | | | |
| 80 | 71886-00 | HOLESPACER SELF ADHESIVE | 2 | S | |
| 81 | 99536-06 | C.S.B.H. SCREW M3 x 16 | 1 | S | |
| 82 | 96763-07 | WASHER FLAT I. D. 4.3 | 4 | S | |
| 83 | 99733-07 | C.S.B.H. SCREW BLACK M 3 x 16 | 4 | S | |
| 84 | 96801-05 | WASHER FLAT BLACK I. D. 3.2 | 36 | S | |
| 85 | 96763-05 | WASHER FLAT I. D. 3.2 | 44 | S | |
| 86 | 96764-04 | WASHER LOCK I. D. 3.2 | 68 | S | |
| 87 | 99740-05 | HEX NUT M 3 | 15 | S | |
| 88 | 99535-05 | C.S.B.H. SCREW M3 x 12 | 8 | S | |
| 89 | 99561-03 | SOCK HEAD CAP SCREW M3 x 10 | 2 | S | |
| 90 | 96765-05 | WASHER LOCK I. D. 4.3 | 10 | S | |
| 91 | 99536-01 | C.S.B.H. SCREW M4 x 6 | 2 | S | |
| 92 | 99538-02 | C.B.S.H. SCREW M3 x 8 | 4 | S | |
| 93 | 99539-01 | C.S.B.H. SCREW M4 x 10 | 4 | S | |
| 94 | 96764-06 | WASHER LOCK I.D. 5.3 | 3 | S | |
| 95 | 99733-03 | C.S.B.H. SCREW BLACK M3 x 8 | 8 | S | |
| 96 | 96765-03 | WASHER LOCK I. D. 3.2 | 3 | S | |
| 97 | 99561-01 | RIVET SCREW M3 x 8 | 3 | S | |
| 98 | 99735-05 | WASHER NYLON I. D. 3.2 | 4 | S | |
| 99 | 99562-02 | SOCK HEAD CAP SCREW M3 x 8 | 2 | S | |
| 100 | 99536-01 | SOCK HEAD CAP SCREW M3 x 6 | 11 | S | |
| 101 | 99735-02 | C.S.B.H. SCREW BLACK M4x8 | 2 | S | |
| 102 | 96801-06 | WASHER FLAT BLACK I.D. 4.3 | 2 | S | |
| 103 | 99538-03 | C.S.B.H. SCREW M3x8 | 10 | S | |
| 104 | 99968-01 | SOCK. HEAD CAP SCREW M3x8 | 8 | S | |
| 105 | 58000-08 | NUT HEX M6 | 3 | S | |
| 106 | 96765-10 | WASHER FLAT I.D. 6.3 | 2 | S | |
| 107 | | | | | |
| 108 | 99764-00 | WASHER LOCK I.D. 6.3 | 2 | S | |
| 109 | 99539-05 | C.S.B.H. SCREW M4x8 | 2 | S | |
| 110 | 99599-05 | C.S.F.H. SCREW M3,5x12 | 1 | S | |
| 111 | 71886-00 | LABEL SET | 1 | S | |
| 112 | 99162-01 | NYLON TUBE ..... MTR | 0.170 | S | |
| 113 | 99773-04 | C.S.B.H. SCREW M3x10 BLACK | 4 | S | |
| 114 | 68936-00 | SAT 2.5AT FUSE | 2 | S | |
| 115 | 68915-00 | 6AT 2.5AT FUSE | 1 | S | |
| 116 | 68912-00 | 1.25AT 250V FUSE | 3 | S | |
| 117 | 68918-00 | 0.8AT 250V FUSE | 1 | S | |
| 118 | | | | | |
| 119 | 68918-00 | 10AT 125V FUSE | 3 | S | ONLY 110V |
| 120 | 68910-00 | BAT 125V FUSE | 1 | S | ONLY 110V |
| 121 | 68896-01 | 3.15 ASB 125V FUSE | 2 | S | ONLY 110V |
| 122 | | | | | |
| 123 | 97105-39 | PRE-TEST PROCEDURE | 1 | P | |
| 124 | 97105-40 | BURN-IN PROCEDURE | 1 | P | |
| 125 | 97105-41 | FINAL TEST PROCEDURE | 1 | P | |
| 126 | 97105-42 | TEST RESULT SHEET PROCEDURE | 1 | P | |
| 127 | 97105-43 | ANALYTICAL EQUIPMENT ADJ. PROCEDURE | 1 | P | |
| 128 | 21081-00 | INTERCONNECTION SCHEMATIC | 1 | P | |
| 129 | | | | | |
| 130 | 64909-02 | SELF ADHESIVE CLIP | 8 | S | |
| 131 | 64909-03 | SELF ADHESIVE CLIP | 4 | S | |
| 132 | 95231-07 | GROMMET | 3 | S | |
| 133 | 95272-18 | GROMMET | 1 | S | |
| 134 | 71814-00 | LABEL ELECTROSTATIC | 1 | S | |
| 135 | 68965-00 | LATCH DETAIL | 1 | S | |
| 136 | 24573-00 | HOSE MOPEDANE CAT | 1 | S | |
| 137 | 96187-01 | PIPE FITTING | 1 | S | |
| 138 | 67964-00 | DILUTOR COVER | 1 | S | |
| 139 | 97240-00 | TRANSFORMER PROTECTION | 1 | S | |
| 140 | 97640-01 | THREADED MAGNET WASHER | 1 | S | |
| 141 | 97441-00 | MAGNET STOP | 1 | S | |
| 142 | 99767-00 | FRONTAL PANEL STRAIT | 8 | S | |
| 143 | 84092-44 | FIXING SCREW | 2 | S | |
| 144 | 96185-01 | FITTING | 1 | S | |
| 145 | 72107-00 | RUBBER GLASS | 1 | S | |
| 146 | 70169-00 | RING COVER | 1 | S | |
| 147 | 70168-00 | SCREW | 1 | S | |
| 148 | 99694-00 | LABEL DATA PLATE | 1 | S | |
| 149 | 71791-00 | LABEL HIGH VOLTAGE(Approv) | 1 | S | |
| 150 | 71967-00 | CAUTION WARNING | 1 | S | |
| 151 | 69961-01 | CAUTION PANEL WALL | 4 | S | |
| 152 | 97041-00 | INTERCONNECTION SCHEMATIC | 1 | S | |
| 153 | 99696-00 | LABEL HIGH VOLTAGE | 1 | S | |
| 154 | 21040-02 | STOP PLATE | 1 | S | |

| ITEM | CODE | DESCRIPTION | QTY | | | NOTES |
|---|---|---|---|---|---|---|
| 1 | 64408-00 | CHASSIS ASSY SILK-SCREENED | 1 | | A | |
| 2 | 8234.0-00 | FLUIDIC PANEL ASSY | 1 | | A | |
| 3 | 82937-00 | FRONT PRINTED PANEL ASSY | 1 | | A | |
| 4 | 98730-00 | BURNER & ATOMIZER ASSY | 1 | | A | |
| 5 | 65321-00 | AIR PLUMBING ASSY | 1 | | A | |
| 6 | 65322-00 | GAS PLUMBING ASSY | 1 | | A | |
| 7 | 98927-00 | PHOTODIODE BOX ASSY | 1 | | A | |
| 8 | 70904-00 | TRANSFORMER ASSY | 1 | | A | |
| 9 | 67841-00 | RIGHT COVER STD | 1 | | A | |
| 10 | 67944-00 | CHIMNEY COVER ASSY | 1 | | A | |
| 11 | 67843-00 | FLAME HOUSING COVER ASSY | 1 | | A | |
| 12 | 98976-00 | FLAME INDICATOR ASSY | 1 | | A | |
| 13 | 86523-00 | RECIRCULATION HINGE ASSY | 1 | | A | |
| 14 | 95127-00 | PROTECTION ASSY | 1 | | A | |
| 15 | 87336-00 | SAMPLE PROBE NEEDLE ASSY | 1 | | A | |
| 16 | 87337-00 | TIP NEEDLE ASSY | 1 | | A | |
| 17 | 87339-00 | CESIUM ASPIRATOR ASSY | 1 | | A | |
| 18 | 90365-00 | FILTER AIR ASSY | 1 | | A | |
| 19 | 30046-00 | AUTOSAMPLER FINAL ASSY | 1 | | A | |
| 20 | 22327-00 | I2C-BUS CABLE ASSY | 1 | | A | |
| 21 | 71999-01 | PCB 1 ASSY (Lamp) | 1 | | A | |
| 22 | 71990-00 | PCB 2 ASSY (Power) | 1 | | A | |
| 23 | 84977-00 | SINGLE BOARD COMPUTER ASSY | 1 | | A | |
| 24 | 84980-00 | PRINTER SAMPLER BOARD ASSY | 1 | | A | |
| 25 | 84984-00 | POWER SUPPLY BOARD ASSY | 1 | | A | |
| 26 | 71981-01 | CABLE PRINTER SAMPLER TO POWER BOARD ASSY | 1 | | A | |
| 27 | 34055-00 | POWER SWITCH AND FUSES ASSY | 1 | | A | |
| 28 | 71987-00 | ASSY HARNESS ELECTRON. - FAMS | 1 | | A | |
| | | & SPRINKING CUP MOTOR | | | | |
| 29 | 71998-00 | SIGNAL HARNESS ASSY | 1 | | A | |
| 30 | 71999-00 | ASSY HARNESS ELECTROVALVE & COIL | 3 | | A | |
| 31 | 87967-00 | LEFT COVER | 1 | | A | |
| 32 | 98344-00 | SOLID STATE RELAY | 1 | | A | |
| 33 | 98356-00 | FAN | 2 | | A | |
| 34 | 67940-01 | FRONT COVER | 1 | | A | |
| 35 | 95123-00 | PLUMBING PROTECTION | 1 | | A | |
| 36 | 82321-00 | FILTER SUPPORT | 1 | | A | |
| 37 | 82327-00 | CHIMNEY SUPPORT | 1 | | A | |
| 38 | 82323-00 | PLUMBING SUPPORT | 2 | | A | |
| 39 | 98524-00 | COVER HINGE | 1 | | A | |
| 40 | 98529-00 | RIGHT COVER HINGE | 1 | | A | |
| 41 | 82473-00 | CLAMP PLUMBING | 1 | | A | |
| 42 | 71307-00 | BOARD GUIDE | 1 | | A | |
| 43 | 83183-00 | PLASTIC STP | 1 | | A | |
| 44 | 73798-01 | UNDERLAMP THERMO = 0,0_1/1,0__°M | 2 | | A | TWO PIECES 0,270 / 0,900 |
| 45 | 39933-00 | PVC TUBING I.D.4,0/6,0 | 0,90 | | A | |
| 46 | 39933-01 | PVC TUBING I.D.6/8,0 | 0,450 | | A | 0,360 / 0,050 |
| 47 | 39090-23 | SILICONE TUBE I.D.__07/9,0__093 | 0,450 | | A | 0,360 / 0,1160 |
| 48 | 21996-00 | POWER CORD ASSY | 2PCS | | * | |
| 49 | 99410-00 | FOOT | 4 | | * | |
| 50 | 77777-00 | SPACER | 4 | | * | |
| 51 | 99908-07 | SELF ADHESIVE CLIP | 9 | | C | |
| 52 | 99909-03 | SELF ADHESIVE CLIP | 4 | | C | |
| 53 | 85371-07 | GROMMET | 9 | | C | |
| 54 | 85370-18 | GROMMET | 1 | | C | |
| 55 | 71814-00 | LABEL ELECTROVALVE | 3 | | C | |
| 56 | 98985-00 | LATCH DETAIL | 1 | | C | |
| 57 | 24973-00 | ASSY HOSE PROPANE GAS | 1 | | C | |
| 58 | 98182-01 | PIPE FITTING | 1 | | C | |
| 59 | 87969-00 | DILUTOR COVER | 1 | | C | |
| 60 | 97770-00 | TRANSFORMER PROTECTION | 1 | | C | |
| 61 | 97480-01 | TWISTED MAGNET WASHER | 1 | | C | |
| 62 | 97481-00 | MAGNET STOP | 1 | | C | |
| 63 | 99787-00 | EXAGONAL ENDS FEMALE | 8 | | C | |
| 64 | 94000-44 | FILLING SCREW | 2 | | C | |
| 65 | 98193-01 | FITTING | 1 | | C | |
| 66 | 77102-00 | CHIMNEY GLASS | 1 | | C | |
| 67 | 70169-00 | RING COVER | 1 | | C | |
| 68 | 70168-00 | SCREEN | 1 | | C | |
| 69 | 98434-00 | LABEL DATA PLATE | 1 | | C | |
| 70 | 71795-00 | LABEL HIGH VOLTAGE(Arrow) | 1 | | C | |
| 71 | 71963-00 | CONNECTOR HOUSE 4Pin2 | | | | |
| 72 | 88737-01 | EXAGONAL ENDS MALE | 4 | | C | |
| 73 | 82091-01 | INTERCONNECTION SCHEMATIC | FF | | F | |
| 74 | 39459-00 | LABEL HIGH VOLTAGE | 1 | | C | |
| 75 | 21240-00 | STOP PLATE | 1 | | C | |
| 76 | 37000-00 | PROFILED FUSE, TEST GRADE CTL | 1 | | A | |
| 77 | 66090-14 | BOTTLE | 1 | | A | |
| 78 | 98186-01 | CAP MICROTUBE | 1 | | A | |
| 79 | | | | | | |
| 80 | 71866-00 | HOLTOPRESS SELF ADHESIVE | | | B | |
| 81 | 99496-06 | C.S.B.H. SCREW M4 x 16 | 6 | | B | |
| 82 | 90763-07 | WASHER FLAT I. D. 4,3 | 12 | | B | |
| 83 | 99733-07 | C.S.B.H. SCREW BLACK M 3 x 16 | 6 | | B | |
| 84 | 99801-05 | WASHER FLAT BLACK I. D. 3,2 | 36 | | B | |
| 85 | 90765-05 | WASHER FLAT I. D. 3,2 | 64 | | B | |
| 86 | 99756-04 | WASHER LOCK I. D. 3,2 | 68 | | B | |
| 87 | 68060-05 | NUT HOT M 3 | 15 | | B | |
| 88 | 99735-05 | C.S.B.H. SCREW M3 x 12 | 8 | | B | |
| 89 | 99681-04 | SCREW HEAD CAP SCREW M3 x 10 | 2 | | B | |
| 90 | 90765-07 | WASHER LOCK I. D. 6,3 | 18 | | B | |
| 91 | 99736-01 | C.S.B.H. SCREW M4 x 6 | 2 | | B | |
| 92 | 99738-01 | C.S.B.H. SCREW M3 x 6 | 4 | | B | |
| 93 | 99739-03 | C.S.B.H. SCREW M4 x 10 | 12 | | B | |
| 94 | 90766-06 | WASHER LOCK I.D. 4,3 | 3 | | B | |
| 95 | 99733-03 | C.S.B.H. SCREW BLACK M3 x 8 | 8 | | B | |
| 96 | 90765-07 | WASHER LOCK I. D. 3,2 | 5 | | B | |
| 97 | 99540-01 | RTLOW SCREW M3 x 8 | 2 | | B | |
| 98 | 90735-05 | WASHER RTLOW I. D. 3,2 | 4 | | B | |
| 99 | 99665-02 | SCCE HEAD CAP SCCEW M3 x 8 | 2 | | B | |
| 100 | 99736-01 | SCCE HEAD CAP SCCEW M3 x 6 | 11 | | B | |
| 101 | 99735-02 | C.S.B.H. SCREW BLACK M4x8 | 2 | | B | |
| 102 | 99680-04 | WASHER FLAT BLACK I.D. 4,3 | 2 | | B | |
| 103 | 99738-03 | C.S.B.H. SCREW M3x8 | 10 | | B | |
| 104 | 99681-01 | SCCE HEAD CAP SCCEW M3x8 | 8 | | B | |
| 105 | 68060-06 | NUT HOT M6 | 2 | | B | |
| 106 | 90763-10 | WASHER FLAT I.D. 6,3 | 2 | | B | |
| 107 | | | | | | |
| 108 | 90766-09 | WASHER LOCK I.D. 6,3 | 2 | | B | |
| 109 | 99734-02 | C.S.B.H. SCREW M4x8 | 2 | | B | |
| 110 | 70190-01 | C.S.F.H. SCREW TC,5x12 | 1 | | B | |
| 111 | 71816-00 | LABEL SET | 1 | | B | |
| 112 | 99142-01 | KEYS TUBE | 9M. | 0,270 | B | |
| 113 | 99733-04 | C.S.B.H. SCREW BLACK M3x10 BLACK | 4 | | B | |
| 114 | 68922-00 | 10AT 125V FUSE | 2 | | C | TWO PIECES 0,270 / 0,900 |
| 115 | 68906-00 | BAT 125V MISC | 1 | | C | |
| 116 | 68902-00 | 3.15 ASB 125V FUSE | 2 | | C | |
| 117 | 68925-00 | 0.8AT 250V FUSE | 1 | | C | |
| 118 | 31051-00 | SHOT PROTECTION PLATE 'A' ASST. | 1 | | X | |
| 119 | 31052-00 | SHOT PROTECTION PLATE 'B' ASST. | 1 | | X | |


| ITEM | CODE | DESCRIPTION | QTY | | | NOTES |
|---|---|---|---|---|---|---|
| 1 | 64408-00 | CHASSIS ASSY SILK-SCREENED | 1 | | A | |
| 2 | 8234.0-00 | FLUIDIC PANEL ASSY | 1 | | A | |
| 3 | 82937-00 | FRONT PRINTED PANEL ASSY | 1 | | A | |
| 4 | 98730-00 | BURNER & ATOMIZER ASSY | 1 | | A | |
| 5 | 65321-00 | AIR PLUMBING ASSY | 1 | | A | |
| 6 | 65322-00 | GAS PLUMBING ASSY | 1 | | A | |
| 7 | 98927-00 | PHOTODIODE BOX ASSY | 1 | | A | |
| 8 | 70904-00 | TRANSFORMER ASSY | 1 | | A | |
| 9 | 67841-00 | RIGHT COVER STD | 1 | | A | |
| 10 | 67944-00 | CHIMNEY COVER ASSY | 1 | | A | |
| 11 | 67843-00 | FLAME HOUSING COVER ASSY | 1 | | A | |
| 12 | 98976-00 | FLAME INDICATOR ASSY | 1 | | A | |
| 13 | 86523-00 | RECIRCULATION HINGE ASSY | 1 | | A | |
| 14 | 95127-00 | PROTECTION ASSY | 1 | | A | |
| 15 | 87336-00 | SAMPLE PROBE NEEDLE ASSY | 1 | | A | |
| 16 | 87337-00 | TIP NEEDLE ASSY | 1 | | A | |
| 17 | 87339-00 | CESIUM ASPIRATOR ASSY | 1 | | A | |
| 18 | 90365-00 | FILTER AIR ASSY | 1 | | A | |
| 19 | 30046-00 | AUTOSAMPLER FINAL ASSY | 1 | | A | |
| 20 | 22327-00 | I2C-BUS CABLE ASSY | 1 | | A | |
| 21 | 71999-00 | PCB 1 ASSY (Lamp) | 1 | | A | |
| 22 | 71990-00 | PCB 2 ASSY (Power) | 1 | | A | |
| 23 | 84977-00 | SINGLE BOARD COMPUTER ASSY | 1 | | A | |
| 24 | 84980-00 | PRINTER SAMPLER BOARD ASSY | 1 | | A | |
| 25 | 84984-00 | POWER SUPPLY BOARD ASSY | 1 | | A | |
| 26 | 71981-00 | CABLE PRINTER SAMPLER TO POWER BOARD ASSY | 1 | | A | |
| 27 | 34055-00 | POWER SWITCH AND FUSES ASSY | 1 | | A | |
| 28 | 71987-00 | ASSY HARNESS ELECTRON. - FAMS | 1 | | A | |
| | | & SPRINKING CUP MOTOR | | | | |
| 29 | 71998-00 | SIGNAL HARNESS ASSY | 1 | | A | |
| 30 | 71999-00 | ASSY HARNESS ELECTROVALVE & COIL | 3 | | A | |
| 31 | 87967-00 | LEFT COVER | 1 | | A | |
| 32 | 98344-00 | SOLID STATE RELAY | 1 | | A | |
| 33 | 98356-00 | FAN | 2 | | A | |
| 34 | 67940-01 | FRONT COVER | 1 | | A | |
| 35 | 95123-00 | PLUMBING PROTECTION | 1 | | A | |
| 36 | 82321-00 | FILTER SUPPORT | 1 | | A | |
| 37 | 82327-00 | CHIMNEY SUPPORT | 1 | | A | |
| 38 | 82323-00 | PLUMBING SUPPORT | 2 | | A | |
| 39 | 98524-00 | COVER HINGE | 1 | | A | |
| 40 | 98529-00 | RIGHT COVER HINGE | 1 | | A | |
| 41 | 82473-00 | CLAMP PLUMBING | 1 | | A | |
| 42 | 71307-00 | BOARD GUIDE | 1 | | A | |
| 43 | 83183-00 | PLASTIC STP | 1 | | A | |
| 44 | 73798-01 | UNDERLAMP THERMO = 0,0_1/1,0__°M | 2 | | A | TWO PIECES 0,270 / 0,900 |
| 45 | 39933-00 | PVC TUBING I.D.4,0/6,0 | 0,90 | | A | |
| 46 | 39933-01 | PVC TUBING I.D.6/8,0 | 0,450 | | A | 0,360 / 0,050 |
| 47 | 39090-23 | SILICONE TUBE I.D.__07/9,0__093 | 0,450 | | A | 0,360 / 0,1160 |
| 48 | 21996-00 | POWER CORD ASSY | 2PCS | | * | |
| 49 | 99410-00 | FOOT | 4 | | * | |
| 50 | 77777-00 | SPACER | 4 | | * | |
| 51 | 99908-07 | SELF ADHESIVE CLIP | 9 | | C | |
| 52 | 99909-03 | SELF ADHESIVE CLIP | 4 | | C | |
| 53 | 85371-07 | GROMMET | 9 | | C | |
| 54 | 85370-18 | GROMMET | 1 | | C | |
| 55 | 71814-00 | LABEL ELECTROVALVE | 3 | | C | |
| 56 | 98985-00 | LATCH DETAIL | 1 | | C | |
| 57 | 24973-00 | ASSY HOSE PROPANE GAS | 1 | | C | |
| 58 | 98182-01 | PIPE FITTING | 1 | | C | |
| 59 | 87969-00 | DILUTOR COVER | 1 | | C | |
| 60 | 97770-00 | TRANSFORMER PROTECTION | 1 | | C | |
| 61 | 97480-01 | TWISTED MAGNET WASHER | 1 | | C | |
| 62 | 97481-00 | MAGNET STOP | 1 | | C | |
| 63 | 99787-00 | EXAGONAL ENDS FEMALE | 8 | | C | |
| 64 | 94000-44 | FILLING SCREW | 2 | | C | |
| 65 | 98193-01 | FITTING | 1 | | C | |
| 66 | 77102-00 | CHIMNEY GLASS | 1 | | C | |
| 67 | 70169-00 | RING COVER | 1 | | C | |
| 68 | 70168-00 | SCREEN | 1 | | C | |
| 69 | 98434-00 | LABEL DATA PLATE | 1 | | C | |
| 70 | 71795-00 | LABEL HIGH VOLTAGE(Arrow) | 1 | | C | |
| 71 | 71963-00 | CONNECTOR HOUSE 4Pin2 | | | | |
| 72 | 88737-01 | EXAGONAL ENDS MALE | 4 | | C | |
| 73 | 82091-01 | INTERCONNECTION SCHEMATIC | FF | | F | |
| 74 | 39459-00 | LABEL HIGH VOLTAGE | 1 | | C | |
| 75 | 21240-00 | STOP PLATE | 1 | | C | |
| 76 | 37000-00 | PROFILED FUSE, TEST GRADE CTL | 1 | | A | |
| 77 | 66090-14 | BOTTLE | 1 | | A | |
| 78 | 98186-01 | CAP MICROTUBE | 1 | | A | |
| 79 | | | | | | |
| 80 | 71866-00 | HOLTOPRESS SELF ADHESIVE | | | B | |
| 81 | 99496-06 | C.S.B.H. SCREW M4 x 16 | 6 | | B | |
| 82 | 90763-07 | WASHER FLAT I. D. 4,3 | 12 | | B | |
| 83 | 99733-07 | C.S.B.H. SCREW BLACK M 3 x 16 | 6 | | B | |
| 84 | 99801-05 | WASHER FLAT BLACK I. D. 3,2 | 36 | | B | |
| 85 | 90765-05 | WASHER FLAT I. D. 3,2 | 64 | | B | |
| 86 | 99756-04 | WASHER LOCK I. D. 3,2 | 68 | | B | |
| 87 | 68060-05 | NUT HOT M 3 | 15 | | B | |
| 88 | 99735-05 | C.S.B.H. SCREW M3 x 12 | 8 | | B | |
| 89 | 99681-04 | SCREW HEAD CAP SCREW M3 x 10 | 2 | | B | |
| 90 | 90765-07 | WASHER LOCK I. D. 6,3 | 18 | | B | |
| 91 | 99736-01 | C.S.B.H. SCREW M4 x 6 | 2 | | B | |
| 92 | 99738-01 | C.S.B.H. SCREW M3 x 6 | 4 | | B | |
| 93 | 99739-03 | C.S.B.H. SCREW M4 x 10 | 12 | | B | |
| 94 | 90766-06 | WASHER LOCK I.D. 4,3 | 3 | | B | |
| 95 | 99733-03 | C.S.B.H. SCREW BLACK M3 x 8 | 8 | | B | |
| 96 | 90765-07 | WASHER LOCK I. D. 3,2 | 5 | | B | |
| 97 | 99540-01 | RTLOW SCREW M3 x 8 | 2 | | B | |
| 98 | 90735-05 | WASHER RTLOW I. D. 3,2 | 4 | | B | |
| 99 | 99665-02 | SCCE HEAD CAP SCCEW M3 x 8 | 2 | | B | |
| 100 | 99736-01 | SCCE HEAD CAP SCCEW M3 x 6 | 11 | | B | |
| 101 | 99735-02 | C.S.B.H. SCREW BLACK M4x8 | 2 | | B | |
| 102 | 99680-04 | WASHER FLAT BLACK I.D. 4,3 | 2 | | B | |
| 103 | 99738-03 | C.S.B.H. SCREW M3x8 | 10 | | B | |
| 104 | 99681-01 | SCCE HEAD CAP SCCEW M3x8 | 8 | | B | |
| 105 | 68060-06 | NUT HOT M6 | 2 | | B | |
| 106 | 90763-10 | WASHER FLAT I.D. 6,3 | 2 | | B | |
| 107 | | | | | | |
| 108 | 90766-09 | WASHER LOCK I.D. 6,3 | 2 | | B | |
| 109 | 99734-02 | C.S.B.H. SCREW M4x8 | 2 | | B | |
| 110 | 70190-01 | C.S.F.H. SCREW TC,5x12 | 1 | | B | |
| 111 | 71816-00 | LABEL SET | 1 | | B | |
| 112 | 99142-01 | KEYS TUBE | 9M. | 0,270 | B | |
| 113 | 99733-04 | C.S.B.H. SCREW BLACK M3x10 BLACK | 4 | | B | |
| 114 | 68922-00 | 10AT 125V FUSE | 2 | | C | TWO PIECES 0,270 / 0,900 |
| 115 | 68906-00 | BAT 125V MISC | 1 | | C | |
| 116 | 68902-00 | 3.15 ASB 125V FUSE | 2 | | C | |
| 117 | 68925-00 | 0.8AT 250V FUSE | 1 | | C | |
| 118 | 31051-00 | SHOT PROTECTION PLATE 'A' ASST. | 1 | | X | |
| 119 | 31052-00 | SHOT PROTECTION PLATE 'B' ASST. | 1 | | X | |



| ITEM | CODE | DESCRIPTION | QTY | | | NOTES |
|---|---|---|---|---|---|---|
| 1 | 64408-00 | CHASSIS ASSY SILK-SCREENED | 1 | | A | |
| 2 | 8234.0-00 | FLUIDIC PANEL ASSY | 1 | | A | |
| 3 | 82937-00 | FRONT PRINTED PANEL ASSY | 1 | | A | |
| 4 | 98730-00 | BURNER & ATOMIZER ASSY | 1 | | A | |
| 5 | 65321-00 | AIR PLUMBING ASSY | 1 | | A | |
| 6 | 65322-00 | GAS PLUMBING ASSY | 1 | | A | |
| 7 | 98927-00 | PHOTODIODE BOX ASSY | 1 | | A | |
| 8 | 70904-00 | TRANSFORMER ASSY | 1 | | A | |
| 9 | 67841-00 | RIGHT COVER STD | 1 | | A | |
| 10 | 67944-00 | CHIMNEY COVER ASSY | 1 | | A | |
| 11 | 67843-00 | FLAME HOUSING COVER ASSY | 1 | | A | |
| 12 | 98976-00 | FLAME INDICATOR ASSY | 1 | | A | |
| 13 | 86523-00 | RECIRCULATION HINGE ASSY | 1 | | A | |
| 14 | 95127-00 | PROTECTION ASSY | 1 | | A | |
| 15 | 87336-00 | SAMPLE PROBE NEEDLE ASSY | 1 | | A | |
| 16 | 87337-00 | TIP NEEDLE ASSY | 1 | | A | |
| 17 | 87339-00 | CESIUM ASPIRATOR ASSY | 1 | | A | |
| 18 | 90365-00 | FILTER AIR ASSY | 1 | | A | |
| 19 | 30046-00 | AUTOSAMPLER FINAL ASSY | 1 | | A | |
| 20 | 22327-00 | I2C-BUS CABLE ASSY | 1 | | A | |
| 21 | 71999-00 | PCB 1 ASSY (Lamp) | 1 | | A | |
| 22 | 71990-00 | PCB 2 ASSY (Power) | 1 | | A | |
| 23 | 84977-00 | SINGLE BOARD COMPUTER ASSY | 1 | | A | |
| 24 | 84980-00 | PRINTER SAMPLER BOARD ASSY | 1 | | A | |
| 25 | 84984-00 | POWER SUPPLY BOARD ASSY | 1 | | A | |
| 26 | 71981-00 | CABLE PRINTER SAMPLER TO POWER BOARD ASSY | 1 | | A | |
| 27 | 34055-00 | POWER SWITCH AND FUSES ASSY | 1 | | A | |
| 28 | 71987-00 | ASSY HARNESS ELECTRON. - FAMS | 1 | | A | |
| | | & SPRINKING CUP MOTOR | | | | |
| 29 | 71998-00 | SIGNAL HARNESS ASSY | 1 | | A | |
| 30 | 71999-00 | ASSY HARNESS ELECTROVALVE & COIL | 3 | | A | |
| 31 | 87967-00 | LEFT COVER | 1 | | A | |
| 32 | 98344-00 | SOLID STATE RELAY | 1 | | A | |
| 33 | 98356-00 | FAN | 2 | | A | |
| 34 | 67940-01 | FRONT COVER | 1 | | A | |
| 35 | 95123-00 | PLUMBING PROTECTION | 1 | | A | |
| 36 | 82321-00 | FILTER SUPPORT | 1 | | A | |
| 37 | 82327-00 | CHIMNEY SUPPORT | 1 | | A | |
| 38 | 82323-00 | PLUMBING SUPPORT | 2 | | A | |
| 39 | 98524-00 | COVER HINGE | 1 | | A | |
| 40 | 98529-00 | RIGHT COVER HINGE | 1 | | A | |
| 41 | 82473-00 | CLAMP PLUMBING | 1 | | A | |
| 42 | 71307-00 | BOARD GUIDE | 1 | | A | |
| 43 | 83183-00 | PLASTIC STP | 1 | | A | |
| 44 | 73798-01 | UNDERLAMP THERMO = 0,0_1/1,0__°M | 2 | | A | TWO PIECES 0,270 / 0,900 |
| 45 | 39933-00 | PVC TUBING I.D.4,0/6,0 | 0,90 | | A | |
| 46 | 39933-01 | PVC TUBING I.D.6/8,0 | 0,450 | | A | 0,360 / 0,050 |
| 47 | 39090-23 | SILICONE TUBE I.D.__07/9,0__093 | 0,450 | | A | 0,360 / 0,1160 |
| 48 | 21996-00 | POWER CORD ASSY | 2PCS | | * | |
| 49 | 99410-00 | FOOT | 4 | | * | |
| 50 | 77777-00 | SPACER | 4 | | * | |
| 51 | 99908-07 | SELF ADHESIVE CLIP | 9 | | C | |
| 52 | 99909-03 | SELF ADHESIVE CLIP | 4 | | C | |
| 53 | 85371-07 | GROMMET | 9 | | C | |
| 54 | 85370-18 | GROMMET | 1 | | C | |
| 55 | 71814-00 | LABEL ELECTROVALVE | 3 | | C | |
| 56 | 98985-00 | LATCH DETAIL | 1 | | C | |
| 57 | 24973-00 | ASSY HOSE PROPANE GAS | 1 | | C | |
| 58 | 98182-01 | PIPE FITTING | 1 | | C | |
| 59 | 87969-00 | DILUTOR COVER | 1 | | C | |
| 60 | 97770-00 | TRANSFORMER PROTECTION | 1 | | C | |
| 61 | 97480-01 | TWISTED MAGNET WASHER | 1 | | C | |
| 62 | 97481-00 | MAGNET STOP | 1 | | C | |
| 63 | 99787-00 | EXAGONAL ENDS FEMALE | 8 | | C | |
| 64 | 94000-44 | FILLING SCREW | 2 | | C | |
| 65 | 98193-01 | FITTING | 1 | | C | |
| 66 | 77102-00 | CHIMNEY GLASS | 1 | | C | |
| 67 | 70169-00 | RING COVER | 1 | | C | |
| 68 | 70168-00 | SCREEN | 1 | | C | |
| 69 | 98434-00 | LABEL DATA PLATE | 1 | | C | |
| 70 | 71795-00 | LABEL HIGH VOLTAGE(Arrow) | 1 | | C | |
| 71 | 71963-00 | CONNECTOR HOUSE 4Pin2 | | | | |
| 72 | 88737-01 | EXAGONAL ENDS MALE | 4 | | C | |
| 73 | 82091-01 | INTERCONNECTION SCHEMATIC | FF | | F | |
| 74 | 39459-00 | LABEL HIGH VOLTAGE | 1 | | C | |
| 75 | 21240-00 | STOP PLATE | 1 | | C | |
| 76 | 37000-00 | PROFILED FUSE, TEST GRADE CTL | 1 | | A | |
| 77 | 66090-14 | BOTTLE | 1 | | A | |
| 78 | 98186-01 | CAP MICROTUBE | 1 | | A | |
| 79 | | | | | | |
| 80 | 71866-00 | HOLTOPRESS SELF ADHESIVE | | | B | |
| 81 | 99496-06 | C.S.B.H. SCREW M4 x 16 | 6 | | B | |
| 82 | 90763-07 | WASHER FLAT I. D. 4,3 | 12 | | B | |
| 83 | 99733-07 | C.S.B.H. SCREW BLACK M 3 x 16 | 6 | | B | |
| 84 | 99801-05 | WASHER FLAT BLACK I. D. 3,2 | 36 | | B | |
| 85 | 90765-05 | WASHER FLAT I. D. 3,2 | 64 | | B | |
| 86 | 99756-04 | WASHER LOCK I. D. 3,2 | 68 | | B | |
| 87 | 68060-05 | NUT HOT M 3 | 15 | | B | |
| 88 | 99735-05 | C.S.B.H. SCREW M3 x 12 | 8 | | B | |
| 89 | 99681-04 | SCREW HEAD CAP SCREW M3 x 10 | 2 | | B | |
| 90 | 90765-07 | WASHER LOCK I. D. 6,3 | 18 | | B | |
| 91 | 99736-01 | C.S.B.H. SCREW M4 x 6 | 2 | | B | |
| 92 | 99738-01 | C.S.B.H. SCREW M3 x 6 | 4 | | B | |
| 93 | 99739-03 | C.S.B.H. SCREW M4 x 10 | 12 | | B | |
| 94 | 90766-06 | WASHER LOCK I.D. 4,3 | 3 | | B | |
| 95 | 99733-03 | C.S.B.H. SCREW BLACK M3 x 8 | 8 | | B | |
| 96 | 90765-07 | WASHER LOCK I. D. 3,2 | 5 | | B | |
| 97 | 99540-01 | RTLOW SCREW M3 x 8 | 2 | | B | |
| 98 | 90735-05 | WASHER RTLOW I. D. 3,2 | 4 | | B | |
| 99 | 99665-02 | SCCE HEAD CAP SCCEW M3 x 8 | 2 | | B | |
| 100 | 99736-01 | SCCE HEAD CAP SCCEW M3 x 6 | 11 | | B | |
| 101 | 99735-02 | C.S.B.H. SCREW BLACK M4x8 | 2 | | B | |
| 102 | 99680-04 | WASHER FLAT BLACK I.D. 4,3 | 2 | | B | |
| 103 | 99738-03 | C.S.B.H. SCREW M3x8 | 10 | | B | |
| 104 | 99681-01 | SCCE HEAD CAP SCCEW M3x8 | 8 | | B | |
| 105 | 68060-06 | NUT HOT M6 | 2 | | B | |
| 106 | 90763-10 | WASHER FLAT I.D. 6,3 | 2 | | B | |
| 107 | | | | | | |
| 108 | 90766-09 | WASHER LOCK I.D. 6,3 | 2 | | B | |
| 109 | 99734-02 | C.S.B.H. SCREW M4x8 | 2 | | B | |
| 110 | 70190-01 | C.S.F.H. SCREW TC,5x12 | 1 | | B | |
| 111 | 71816-00 | LABEL SET | 1 | | B | |
| 112 | 99142-01 | KEYS TUBE | 9M. | 0,270 | B | |
| 113 | 99733-04 | C.S.B.H. SCREW BLACK M3x10 BLACK | 4 | | B | |
| 114 | 68922-00 | 10AT 125V FUSE | 2 | | C | TWO PIECES 0,270 / 0,900 |
| 115 | 68906-00 | BAT 125V MISC | 1 | | C | |
| 116 | 68902-00 | 3.15 ASB 125V FUSE | 2 | | C | |
| 117 | 68925-00 | 0.8AT 250V FUSE | 1 | | C | |
| 118 | 31051-00 | SHOT PROTECTION PLATE 'A' ASST. | 1 | | X | |
| 119 | 31052-00 | SHOT PROTECTION PLATE 'B' ASST. | 1 | | X | |



| ITEM | CODE | DESCRIPTION | QTY | | | NOTES |
|---|---|---|---|---|---|---|
| 1 | 64408-00 | CHASSIS ASSY SILK-SCREENED | 1 | | A | |
| 2 | 8234.0-00 | FLUIDIC PANEL ASSY | 1 | | A | |
| 3 | 82937-00 | FRONT PRINTED PANEL ASSY | 1 | | A | |
| 4 | 98730-00 | BURNER & ATOMIZER ASSY | 1 | | A | |
| 5 | 65321-00 | AIR PLUMBING ASSY | 1 | | A | |
| 6 | 65322-00 | GAS PLUMBING ASSY | 1 | | A | |
| 7 | 98927-00 | PHOTODIODE BOX ASSY | 1 | | A | |
| 8 | 70904-00 | TRANSFORMER ASSY | 1 | | A | |
| 9 | 67841-00 | RIGHT COVER STD | 1 | | A | |
| 10 | 67944-00 | CHIMNEY COVER ASSY | 1 | | A | |
| 11 | 67843-00 | FLAME HOUSING COVER ASSY | 1 | | A | |
| 12 | 98976-00 | FLAME INDICATOR ASSY | 1 | | A | |
| 13 | 86523-00 | RECIRCULATION HINGE ASSY | 1 | | A | |
| 14 | 95127-00 | PROTECTION ASSY | 1 | | A | |
| 15 | 87336-00 | SAMPLE PROBE NEEDLE ASSY | 1 | | A | |
| 16 | 87337-00 | TIP NEEDLE ASSY | 1 | | A | |
| 17 | 87339-00 | CESIUM ASPIRATOR ASSY | 1 | | A | |
| 18 | 90365-00 | FILTER AIR ASSY | 1 | | A | |
| 19 | 30046-00 | AUTOSAMPLER FINAL ASSY | 1 | | A | |
| 20 | 22327-00 | I2C-BUS CABLE ASSY | 1 | | A | |
| 21 | 71999-00 | PCB 1 ASSY (Lamp) | 1 | | A | |
| 22 | 71990-00 | PCB 2 ASSY (Power) | 1 | | A | |
| 23 | 84977-00 | SINGLE BOARD COMPUTER ASSY | 1 | | A | |
| 24 | | | | | | |
| 25 | 84984-00 | POWER SUPPLY BOARD ASSY | 1 | | A | |
| 26 | | | | | | |
| 27 | 34055-00 | POWER SWITCH AND FUSES ASSY | 1 | | A | |
| 28 | 71987-00 | ASSY HARNESS ELECTRON. - FAMS | 1 | | A | |
| | | & SPRINKING CUP MOTOR | | | | |
| 29 | 71998-00 | SIGNAL HARNESS ASSY | 1 | | A | |
| 30 | 71999-00 | ASSY HARNESS ELECTROVALVE & COIL | 3 | | A | |
| 31 | 87967-00 | LEFT COVER | 1 | | A | |
| 32 | 98344-00 | SOLID STATE RELAY | 1 | | A | |
| 33 | 98356-00 | FAN | 2 | | A | |
| 34 | 67940-01 | FRONT COVER | 1 | | A | |
| 35 | 95123-00 | PLUMBING PROTECTION | 1 | | A | |
| 36 | 82321-00 | FILTER SUPPORT | 1 | | A | |
| 37 | 82327-00 | CHIMNEY SUPPORT | 1 | | A | |
| 38 | 82323-00 | PLUMBING SUPPORT | 2 | | A | |
| 39 | 98524-00 | COVER HINGE | 1 | | A | |
| 40 | 98529-00 | RIGHT COVER HINGE | 1 | | A | |
| 41 | 82473-00 | CLAMP PLUMBING | 1 | | A | |
| 42 | 71307-00 | BOARD GUIDE | 1 | | A | |
| 43 | 83183-00 | PLASTIC STP | 1 | | A | |
| 44 | 73798-01 | UNDERLAMP THERMO = 0,0_1/1,0__°M | 2 | | A | TWO PIECES 0,270 / 0,900 |
| 45 | 39933-00 | PVC TUBING I.D.4,0/6,0 | 0,90 | | A | |
| 46 | 39933-01 | PVC TUBING I.D.6/8,0 | 0,450 | | A | 0,360 / 0,050 |
| 47 | 39090-23 | SILICONE TUBE I.D.__07/9,0__093 | 0,450 | | A | 0,360 / 0,1160 |
| 48 | 21996-00 | POWER CORD ASSY | 2PCS | | * | |
| 49 | 99410-00 | FOOT | 4 | | * | |
| 50 | 77777-00 | SPACER | 4 | | * | |
| 51 | 99908-07 | SELF ADHESIVE CLIP | 9 | | C | |
| 52 | 99909-03 | SELF ADHESIVE CLIP | 4 | | C | |
| 53 | 85371-07 | GROMMET | 9 | | C | |
| 54 | 85370-18 | GROMMET | 1 | | C | |
| 55 | 71814-00 | LABEL ELECTROVALVE | 3 | | C | |
| 56 | 98985-00 | LATCH DETAIL | 1 | | C | |
| 57 | 24973-00 | ASSY HOSE PROPANE GAS | 1 | | C | |
| 58 | 98182-01 | PIPE FITTING | 1 | | C | |
| 59 | 87969-00 | DILUTOR COVER | 1 | | C | |
| 60 | 97770-00 | TRANSFORMER PROTECTION | 1 | | C | |
| 61 | 97480-01 | TWISTED MAGNET WASHER | 1 | | C | |
| 62 | 97481-00 | MAGNET STOP | 1 | | C | |
| 63 | 99787-00 | EXAGONAL ENDS FEMALE | 8 | | C | |
| 64 | 94000-44 | FILLING SCREW | 2 | | C | |
| 65 | 98193-01 | FITTING | 1 | | C | |
| 66 | 77102-00 | CHIMNEY GLASS | 1 | | C | |
| 67 | 70169-00 | RING COVER | 1 | | C | |
| 68 | 70168-00 | SCREEN | 1 | | C | |
| 69 | 98434-00 | LABEL DATA PLATE | 1 | | C | |
| 70 | 71795-00 | LABEL HIGH VOLTAGE(Arrow) | 1 | | C | |
| 71 | 71963-00 | CONNECTOR HOUSE 4Pin2 | | | | |
| 72 | 88737-01 | EXAGONAL ENDS MALE | 2 | | C | |
| 73 | 82091-01 

## 70243-06 FINAL ASSY WITH PRINTER WITH AUTOSAMPLER

| ITEM | CODE | DESCRIPTION | Qty | | | NOTES |
|---|---|---|---|---|---|---|
| 1 | 66605-00 | CHASSIS ASSY SILK-SCREENED | 1 | A | 3 | |
| 2 | 82540-00 | FLUIDIC PANEL ASSY | 1 | A | 3 | |
| 3 | 82327-00 | FRONT PRINTER PANEL ASSY | 1 | A | 3 | |
| 4 | 98730-00 | BURNER & ATOMIZER ASSY | 1 | A | 3 | |
| 5 | 65321-00 | AIR PLUMBING ASSY | 1 | A | 3 | |
| 6 | 65322-00 | GAS PLUMBING ASSY | 1 | A | 3 | |
| 7 | 98927-00 | PHOTODIODE BOX ASSY | 1 | A | 3 | |
| 8 | 70904-00 | TRANSFORMER ASSY | 1 | A | 3 | |
| 9 | 67841-00 | RIGHT COVER STD | 1 | A | 3 | |
| 10 | 67844-00 | CHIMNEY COVER ASSY | 1 | A | 3 | |
| 11 | 67843-00 | FLAME HOUSING COVER ASSY | 1 | A | 3 | |
| 12 | 98978-00 | FLAME INDICATOR ASSY | 1 | A | 3 | |
| 13 | 66523-00 | REINFORCEMENT NINCE ASSY | 1 | A | 3 | |
| 14 | 95127-00 | PROTECTION ASSY | 1 | A | C | |
| 15 | 97334-00 | SAMPLE PROBE NEEDLE ASSY | 1 | A | C | |
| 16 | 97335-00 | TIP NEEDLE ASSY | 1 | A | 3 | |
| 17 | 97336-00 | CESIUM ASPIRATOR ASSY | 1 | A | C | |
| 18 | 90969-00 | FILTER AIR ASSY | 1 | A | C | |
| 19 | 70944-01 | AUTOSAMPLER FINAL ASSY | 1 | A | 3 | |
| 20 | 22322-00 | IGNITION CABLE ASSY | 1 | A | 3 | |
| 21 | 71989-00 | BUS 1 ASSY (Long) | 1 | A | 3 | |
| 22 | 71990-00 | BUS 2 ASSY (Short) | 1 | A | 3 | |
| 23 | 84977-00 | SINGLE BOARD COMPUTER ASSY | 1 | A | 3 | |
| 24 | 84980-00 | PRINTER SAMPLER BOARD ASSY | 1 | A | 3 | |
| 25 | 84984-00 | POWER SUPPLY BOARD ASSY | 1 | A | 3 | |
| 26 | 71991-01 | CABLE PRINTER SAMPLER TO POWER BOARD ASSY | 1 | A | 3 | |
| 27 | 71045-00 | POWER SWITCH AND FUSES ASSY | 1 | A | 3 | |
| 28 | 71987-00 | ASSY HARNESS ELECTRON. - FANS | 1 | A | 3 | |
| | | & SPINNING CUP MOTOR | | | | |
| 29 | 71988-00 | SIGNAL HARNESS ASSY | 1 | A | 3 | |
| 30 | 71989-00 | ASSY HARNESS ELECTROVALV & COIL | 1 | A | 3 | |
| 31 | 67842-00 | LEFT COVER | 1 | A | 3 | |
| 32 | 98345-00 | SOLID STATE RELAY | 1 | A | 3 | |
| 33 | 99799-00 | FAN | 2 | A | 3 | |
| 34 | 67840-00 | FRONT COVER | 1 | A | 3 | |
| 35 | 95173-00 | PLUMBING PROTECTION | 1 | A | 3 | |
| 36 | 82321-00 | FILTER SUPPORT | 1 | A | 3 | |
| 37 | 82327-00 | CYLINDER SUPPORT | 1 | A | 3 | |
| 38 | 82323-00 | PLUMBING SUPPORT | 2 | A | 3 | |
| 39 | 98424-00 | COVER HINGE | 1 | A | 3 | |
| 40 | 98429-00 | RIGHT COVER HINGE | 1 | A | 3 | |
| 41 | 82473-00 | CLAMP PLUMBING | 1 | A | 3 | |
| 42 | 71302-00 | BOARD OUTSIDE | 1 | A | 3 | |
| 43 | 83183-00 | PLASTIC TIP | 1 | A | 3 | |
| 44 | 73789-01 | URETHANE TUBING - O.D. 1/I.D. .04 | 0.240 | A | 3 | Two Meters 0.220 / 0.000 |
| 45 | 39073-00 | PVC TUBING I.D.4/O.D.8 | 0.160 | A | 3 | |
| 46 | 39073-01 | PVC TUBING I.D.8/O.D.2 | 0.240 | A | 3 | Two Meters 0.220 / 0.000 |
| 47 | 39090-23 | TYGON TUBE I.D. .02/O.D. .093 | 0.240 | A | 3 | Two Meters 0.140 / 0.140 |
| 48 | 71992-00 | POWER CORD ASSY | REF | A | 3 | |
| 49 | 97810-00 | FOOT | 4 | A | 3 | |
| 50 | 77777-00 | SPACER | * | A | 3 | |
| 51 | 84908-02 | SELF ADHESIVE CLIP | 8 | A | C | |
| 52 | 84909-02 | SELF ADHESIVE CLIP | 4 | A | C | |
| 53 | 95371-07 | GROMMET | 3 | A | C | |
| 54 | 93270-18 | GROMMET | 1 | A | C | |
| 55 | 71814-00 | LABEL ELECTROVALVE | 1 | A | 3 | |
| 56 | 84983-00 | LATCH DETAIL | 1 | A | 3 | |
| 57 | 24573-00 | ASSY HOSE PROPANE GAS | 1 | A | 3 | |
| 58 | 98192-01 | PIPE FITTING | 1 | A | 3 | |
| 59 | 87845-00 | DILUTOR COVER | 1 | A | 3 | |
| 60 | 97290-00 | TRANSFORMER PROTECTION | 1 | A | 3 | |
| 61 | 97480-01 | THREADED MAGNET WASHER | 1 | A | 3 | |
| 62 | 97481-00 | MAGNET STOP | 1 | A | 3 | |
| 63 | 98787-00 | HEXAGONAL ENDS FEMALE | 8 | A | 3 | |
| 64 | 84999-44 | FILLING SCREW | 2 | A | 3 | |
| 65 | 98193-01 | FITTING | 1 | A | 3 | |
| 66 | 72107-00 | CHIMNEY GLASS | 1 | A | 3 | |
| 67 | 70189-00 | RING COVER | 1 | A | 3 | |
| 68 | 70188-00 | SCREEN | 1 | A | 3 | |
| 69 | 99454-00 | LABEL DATA PLATE | 1 | A | 3 | |
| 70 | 71795-02 | LABEL HIGH VOLTAGE(ARROW) | 1 | A | 3 | |
| 71 | 71863-00 | CAOUTCHOUC HOUSSE 40x2 | | A | 3 | |
| 72 | 98787-01 | HEXAGONAL ENDS MALE | 4 | A | 3 | |
| 73 | 82981-00 | INTERCONNECTION SCHEMATIC | REF | A | 3 | |
| 74 | 98436-00 | LABEL HIGH VOLTAGE | 1 | A | 3 | |
| 75 | 71040-00 | STOP PLATE | 1 | A | 3 | |

| ITEM | CODE | DESCRIPTION | Qty | | | NOTES |
|---|---|---|---|---|---|---|
| 76 | 97000-00 | PROPANE FUEL INST GRADE CYL | 1 | B | | |
| 77 | 66090-14 | BOTTLE | 1 | B | | |
| 78 | 98186-01 | CAP MONITOR | 1 | A | 2 | |
| 79 | | | | | | |
| 80 | 71886-00 | MOLYKOTE SELF ADHESIVE | | B | | |
| 81 | 99599-06 | C.S.B.H. SCREW M4 x 16 | 4 | B | | |
| 82 | 90763-07 | WASHER FLAT I. D. 4,3 | 4 | B | | |
| 83 | 99733-07 | C.S.B.H. SCREW BLACK M 3 x 16 | 4 | B | | |
| 84 | 99801-05 | WASHER FLAT BLACK I. D. 3,2 | 36 | B | | |
| 85 | 90763-05 | WASHER FLAT I. D. 3,2 | 64 | B | | |
| 86 | 90766-04 | WASHER LOCK I. D. 3,2 | 68 | B | | |
| 87 | 68000-05 | NUT HOT M 3 | 15 | B | | |
| 88 | 99588-05 | C.S.B.H. SCREW M3 x 12 | 8 | B | | |
| 89 | 99681-04 | SOCK HEAD CAP SCRUW M3 x 10 | 2 | B | | |
| 90 | 90765-05 | WASHER LOCK I. D. 4,3 | 10 | B | | |
| 91 | 99589-01 | C.S.B.H. SCREW M4 x 6 | 2 | B | | |
| 92 | 99588-01 | C.S.B.H. SCREW M3 x 6 | 4 | B | | |
| 93 | 99589-03 | C.S.B.H. SCREW M4 x 10 | 4 | B | | |
| 94 | 90766-06 | WASHER LOCK I.D. 6,3 | 1 | B | | |
| 95 | 99733-03 | C.S.B.H. SCREW BLACK M3 x 8 | 8 | B | | |
| 96 | 90765-03 | WASHER LOCK I. D. 3,2 | 4 | B | | |
| 97 | 99540-01 | NYLOK SCREW M3 x 8 | 2 | B | | |
| 98 | 90733-05 | WASHER NYLON I. D. 3,2 | 4 | B | | |
| 99 | 99682-01 | SOCK HEAD CAP SCRUW M3 x 8 | 2 | B | | |
| 100 | 99536-01 | SOCK HEAD CAP SCRUW M3 x 6 | 11 | B | | |
| 101 | 99735-01 | C.S.B.H. SCREW BLACK M4x8 | 2 | B | | |
| 102 | 99801-06 | WASHER FLAT BLACK I.D. 4,3 | 2 | B | | |
| 103 | 99588-01 | C.S.B.H. SCREW M3x6 | 10 | B | | |
| 104 | 99681-01 | SOCK. HEAD CAP SCRUW M3x6 | 8 | B | | |
| 105 | 68000-08 | NUT HEX M6 | 3 | B | | |
| 106 | 90763-10 | WASHER FLAT I.D. 6,3 | 2 | B | | |
| 107 | 90766-05 | WASHER LOCK I.D. 6,3 | 1 | B | | |
| 108 | 90766-06 | WASHER LOCK I.D. 6,3 | 2 | B | | |
| 109 | 99599-02 | C.S.B.H. SCREW M4x8 | 2 | B | | |
| 110 | 99599-05 | C.S.P.H. SCREW M5,5x12 | 1 | B | | |
| 111 | 71816-00 | LABEL SET | 1 | B | | |
| 112 | 99142-03 | NYLON TUBE | 95 | B | 2,375 | |
| 113 | 99733-04 | C.S.B.H. SCREW M3x10 BLACK | 6 | B | | |
| 114 | 68914-00 | SAT 125V FUSE | 2 | B | | |
| 115 | 68915-00 | 6AT 125V FUSE | 1 | B | | |
| 116 | 68912-00 | 4.0 AT 250V FUSE | 2 | B | | |
| 117 | 68916-00 | 0.8AT 250V FUSE | 1 | B | | |
| 118 | 68918-00 | 10AT 125V FUSE | 2 | B | | ONLY 110V |
| 119 | 68919-00 | BAT 125V FUSE | 1 | B | | ONLY 110V |
| 120 | 68896-01 | 3.15AT 125V FUSE | 2 | B | | ONLY 110V |
| 121 | 97505-70 | PRE-TEST PROCEDURE | REF | F | | |
| 122 | 97505-40 | BURN-IN PROCEDURE | REF | F | | |
| 123 | 97505-41 | FINAL TEST PROCEDURE | REF | F | | |
| 124 | 97505-42 | TEST RESULT SHEET PROCEDURE | REF | F | | |
| 125 | 97505-43 | ANALYTICAL SYSTEM, REF. PROCEDURE | REF | A | 2 | |
| 126 | 82081-00 | INTERCONNECTION SCHEMATIC | REF | A | 3 | |

## 70243-07 FINAL ASSY WITH PRINTER WITHOUT AUTOSAMPLER

| ITEM | CODE | DESCRIPTION | Qty | | | NOTES |
|---|---|---|---|---|---|---|
| 1 | 66605-00 | CHASSIS ASSY SILK-SCREENED | 1 | A | 3 | |
| 2 | 82540-00 | FLUIDIC PANEL ASSY | 1 | A | 3 | |
| 3 | 82327-00 | FRONT PRINTER PANEL ASSY | 1 | A | 3 | |
| 4 | 98730-00 | BURNER & ATOMIZER ASSY | 1 | A | 3 | |
| 5 | 65321-00 | AIR PLUMBING ASSY | 1 | A | 3 | |
| 6 | 65322-00 | GAS PLUMBING ASSY | 1 | A | 3 | |
| 7 | 98927-00 | PHOTODIODE BOX ASSY | 1 | A | 3 | |
| 8 | 70904-00 | TRANSFORMER ASSY | 1 | A | 3 | |
| 9 | 67841-00 | RIGHT COVER STD | 1 | A | 3 | |
| 10 | 67844-00 | CHIMNEY COVER ASSY | 1 | A | 3 | |
| 11 | 67843-00 | FLAME HOUSING COVER ASSY | 1 | A | 3 | |
| 12 | 98978-00 | FLAME INDICATOR ASSY | 1 | A | 3 | |
| 13 | 66523-00 | REINFORCEMENT NINCE ASSY | 1 | A | 3 | |
| 14 | 95127-00 | PROTECTION ASSY | 1 | A | C | |
| 15 | 97334-00 | SAMPLE PROBE NEEDLE ASSY | 1 | A | C | |
| 16 | 97335-00 | TIP NEEDLE ASSY | 1 | A | 3 | |
| 17 | 97336-00 | CESIUM ASPIRATOR ASSY | 1 | A | C | |
| 18 | 90969-00 | FILTER AIR ASSY | 1 | A | C | |
| 19 | 70944-00 | STOP PLATE ASSY | 1 | A | 3 | |
| 20 | 22322-00 | IGNITION CABLE ASSY | 1 | A | 3 | |
| 21 | 71989-00 | BUS 1 ASSY (Long) | 1 | A | 3 | |
| 22 | 71990-00 | BUS 2 ASSY (Short) | 1 | A | 3 | |
| 23 | 84977-00 | SINGLE BOARD COMPUTER ASSY | 1 | A | 3 | |
| 24 | 84980-00 | PRINTER SAMPLER BOARD ASSY | 1 | A | 3 | |
| 25 | 84984-00 | POWER SUPPLY BOARD ASSY | 1 | A | 3 | |
| 26 | 71991-05 | CABLE PRINTER SAMPLER TO POWER BOARD ASSY | 1 | A | 3 | |
| 27 | 71045-00 | POWER SWITCH AND FUSES ASSY | 1 | A | 3 | |
| 28 | 71987-00 | ASSY HARNESS ELECTRON. - FANS | 1 | A | 3 | |
| | | & SPINNING CUP MOTOR | | | | |
| 29 | 71988-00 | SIGNAL HARNESS ASSY | 1 | A | 3 | |
| 30 | 71989-00 | ASSY HARNESS ELECTROVALV & COIL | 1 | A | 3 | |
| 31 | 67842-00 | LEFT COVER | 1 | A | 3 | |
| 32 | 98345-00 | SOLID STATE RELAY | 1 | A | 3 | |
| 33 | 99799-00 | FAN | 2 | A | 3 | |
| 34 | 67840-00 | FRONT COVER | 1 | A | 3 | |
| 35 | 95173-00 | PLUMBING PROTECTION | 1 | A | 3 | |
| 36 | 82321-00 | FILTER SUPPORT | 1 | A | 3 | |
| 37 | 82327-00 | CYLINDER SUPPORT | 1 | A | 3 | |
| 38 | 82323-00 | PLUMBING SUPPORT | 2 | A | 3 | |
| 39 | 98424-00 | COVER HINGE | 1 | A | 3 | |
| 40 | 98429-00 | RIGHT COVER HINGE | 1 | A | 3 | |
| 41 | 82473-00 | CLAMP PLUMBING | 1 | A | 3 | |
| 42 | 71302-00 | BOARD OUTSIDE | 1 | A | 3 | |
| 43 | 83183-00 | PLASTIC TIP | 1 | A | 3 | |
| 44 | 73789-01 | URETHANE TUBING - O.D. 1/I.D. .04 | 0.240 | A | 3 | Two Meters 0.220 / 0.000 |
| 45 | 39073-00 | PVC TUBING I.D.4/O.D.8 | 0.160 | A | 3 | |
| 46 | 39073-01 | PVC TUBING I.D.8/O.D.2 | 0.240 | A | 3 | Two Meters 0.220 / 0.000 |
| 47 | 39090-23 | TYGON TUBE I.D. .02/O.D. .093 | 0.240 | A | 3 | Two Meters 0.140 / 0.140 |
| 48 | 71992-00 | POWER CORD ASSY | REF | A | 3 | |
| 49 | 97810-00 | FOOT | 4 | A | 3 | |
| 50 | 77777-00 | SPACER | * | A | 3 | |
| 51 | 84908-02 | SELF ADHESIVE CLIP | 8 | A | C | |
| 52 | 84909-02 | SELF ADHESIVE CLIP | 4 | A | C | |
| 53 | 95371-07 | GROMMET | 3 | A | C | |
| 54 | 93270-18 | GROMMET | 1 | A | C | |
| 55 | 71814-00 | LABEL ELECTROVALVE | 1 | A | 3 | |
| 56 | 84983-00 | LATCH DETAIL | 1 | A | 3 | |
| 57 | 24573-00 | ASSY HOSE PROPANE GAS | 1 | A | 3 | |
| 58 | 98192-01 | PIPE FITTING | 1 | A | 3 | |
| 59 | 87845-00 | DILUTOR COVER | 1 | A | 3 | |
| 60 | 97290-00 | TRANSFORMER PROTECTION | 1 | A | 3 | |
| 61 | 97480-01 | THREADED MAGNET WASHER | 1 | A | 3 | |
| 62 | 97481-00 | MAGNET STOP | 1 | A | 3 | |
| 63 | 98787-00 | HEXAGONAL ENDS FEMALE | 8 | A | 3 | |
| 64 | 84999-44 | FILLING SCREW | 2 | A | 3 | |
| 65 | 98193-01 | FITTING | 1 | A | 3 | |
| 66 | 72107-00 | CHIMNEY GLASS | 1 | A | 3 | |
| 67 | 70189-00 | RING COVER | 1 | A | 3 | |
| 68 | 70188-00 | SCREEN | 1 | A | 3 | |
| 69 | 99454-00 | LABEL DATA PLATE | 1 | A | 3 | |
| 70 | 71795-00 | LABEL HIGH VOLTAGE(ARROW) | 1 | A | 3 | |
| 71 | 71863-00 | CAOUTCHOUC HOUSSE 40x2 | | A | 3 | |
| 72 | 98787-01 | HEXAGONAL ENDS MALE | 4 | A | 3 | |
| 73 | 82981-00 | INTERCONNECTION SCHEMATIC | REF | A | 3 | |
| 74 | 98436-00 | LABEL HIGH VOLTAGE | 1 | A | 3 | |
| 75 | 71040-00 | STOP PLATE | 1 | A | 3 | |

| ITEM | CODE | DESCRIPTION | Qty | | | NOTES |
|---|---|---|---|---|---|---|
| 76 | 97000-00 | PROPANE FUEL INST GRADE CYL | 1 | B | | |
| 77 | 66090-14 | BOTTLE | 1 | B | | |
| 78 | 98186-01 | CAP MONITOR | 1 | A | 2 | |
| 79 | | | | | | |
| 80 | 71886-00 | MOLYKOTE SELF ADHESIVE | | B | | |
| 81 | 99599-06 | C.S.B.H. SCREW M4 x 16 | 4 | B | | |
| 82 | 90763-07 | WASHER FLAT I. D. 4,3 | 4 | B | | |
| 83 | 99733-07 | C.S.B.H. SCREW BLACK M 3 x 16 | 4 | B | | |
| 84 | 99801-05 | WASHER FLAT BLACK I. D. 3,2 | 36 | B | | |
| 85 | 90763-05 | WASHER FLAT I. D. 3,2 | 64 | B | | |
| 86 | 90766-04 | WASHER LOCK I. D. 3,2 | 68 | B | | |
| 87 | 68000-05 | NUT HOT M 3 | 15 | B | | |
| 88 | 99588-05 | C.S.B.H. SCREW M3 x 12 | 8 | B | | |
| 89 | 99681-04 | SOCK HEAD CAP SCRUW M3 x 10 | 2 | B | | |
| 90 | 90765-05 | WASHER LOCK I. D. 4,3 | 10 | B | | |
| 91 | 99589-01 | C.S.B.H. SCREW M4 x 6 | 2 | B | | |
| 92 | 99588-01 | C.S.B.H. SCREW M3 x 6 | 4 | B | | |
| 93 | 99589-03 | C.S.B.H. SCREW M4 x 10 | 4 | B | | |
| 94 | 90766-06 | WASHER LOCK I.D. 6,3 | 1 | B | | |
| 95 | 99733-03 | C.S.B.H. SCREW BLACK M3 x 8 | 8 | B | | |
| 96 | 90765-03 | WASHER LOCK I. D. 3,2 | 4 | B | | |
| 97 | 99540-01 | NYLOK SCREW M3 x 8 | 2 | B | | |
| 98 | 90733-05 | WASHER NYLON I. D. 3,2 | 4 | B | | |
| 99 | 99682-01 | SOCK HEAD CAP SCRUW M3 x 8 | 2 | B | | |
| 100 | 99536-01 | SOCK HEAD CAP SCRUW M3 x 6 | 11 | B | | |
| 101 | 99735-01 | C.S.B.H. SCREW BLACK M4x8 | 2 | B | | |
| 102 | 99801-06 | WASHER FLAT BLACK I.D. 4,3 | 2 | B | | |
| 103 | 99588-01 | C.S.B.H. SCREW M3x6 | 10 | B | | |
| 104 | 99681-01 | SOCK. HEAD CAP SCRUW M3x6 | 8 | B | | |
| 105 | 68000-08 | NUT HEX M6 | 2 | B | | |
| 106 | 90763-10 | WASHER FLAT I.D. 6,3 | 2 | B | | |
| 107 | | | | | | |
| 108 | 90766-06 | WASHER LOCK I.D. 6,3 | 2 | B | | |
| 109 | 99599-02 | C.S.B.H. SCREW M4x8 | 2 | B | | |
| 110 | 99599-05 | C.S.P.H. SCREW M5,5x12 | 1 | B | | |
| 111 | 71816-00 | LABEL SET | 1 | B | | |
| 112 | 99142-03 | NYLON TUBE | 95 | B | 2,375 | |
| 113 | 99733-04 | C.S.B.H. SCREW M3x10 BLACK | 6 | B | | |
| 114 | 68914-00 | SAT 125V FUSE | 2 | B | | |
| 115 | 68915-00 | 6AT 125V FUSE | 1 | B | | |
| 116 | 68912-00 | 1.6AT 250V FUSE | 2 | B | | |
| 117 | 68916-00 | 0.8AT 250V FUSE | 1 | B | | |
| 118 | 68918-00 | 10AT 125V FUSE | 2 | B | | ONLY 110V |
| 119 | 68919-00 | BAT 125V FUSE | 1 | B | | ONLY 110V |
| 120 | 68896-01 | 3.15AT 125V FUSE | 2 | B | | ONLY 110V |
| 121 | 97505-70 | PRE-TEST PROCEDURE | REF | F | | |
| 122 | 97505-40 | BURN-IN PROCEDURE | REF | F | | |
| 123 | 97505-41 | FINAL TEST PROCEDURE | REF | F | | |
| 124 | 97505-42 | TEST RESULT SHEET PROCEDURE | REF | F | | |
| 125 | 97505-43 | ANALYTICAL SYSTEM, REF. PROCEDURE | REF | A | 2 | |
| 126 | 82081-00 | INTERCONNECTION SCHEMATIC | REF | A | 3 | |

## 70243-08 FINAL ASSY WITHOUT PRINTER WITHOUT AUTOSAMPLER

| ITEM | CODE | DESCRIPTION | Qty | | | NOTES |
|---|---|---|---|---|---|---|
| 1 | 66605-00 | CHASSIS ASSY SILK-SCREENED | 1 | A | 3 | |
| 2 | 82540-00 | FLUIDIC PANEL ASSY | 1 | A | 3 | |
| 3 | 82338-00 | FRONT PANEL ASSY | 1 | A | 3 | |
| 4 | 98730-00 | BURNER & ATOMIZER ASSY | 1 | A | 3 | |
| 5 | 65321-00 | AIR PLUMBING ASSY | 1 | A | 3 | |
| 6 | 65327-00 | GAS PLUMBING ASSY | 1 | A | 3 | |
| 7 | 98927-00 | PHOTODIODE BOX ASSY | 1 | A | 3 | |
| 8 | 70904-00 | TRANSFORMER ASSY | 1 | A | 3 | |
| 9 | 67841-00 | RIGHT COVER STD | 1 | A | 3 | |
| 10 | 67844-00 | CHIMNEY COVER ASSY | 1 | A | 3 | |
| 11 | 67843-00 | FLAME HOUSING COVER ASSY | 1 | A | 3 | |
| 12 | 98978-00 | FLAME INDICATOR ASSY | 1 | A | 3 | |
| 13 | 66523-00 | REINFORCEMENT NINCE ASSY | 1 | A | 3 | |
| 14 | 95127-00 | PROTECTION ASSY | 1 | A | C | |
| 15 | 97334-00 | SAMPLE PROBE NEEDLE ASSY | 1 | A | C | |
| 16 | 97335-00 | TIP NEEDLE ASSY | 1 | A | 3 | |
| 17 | 97336-00 | CESIUM ASPIRATOR ASSY | 1 | A | C | |
| 18 | 90969-00 | FILTER AIR ASSY | 1 | A | C | |
| 19 | 90944-00 | STOP PLATE ASSY | 1 | A | 3 | |
| 20 | 22322-00 | IGNITION CABLE ASSY | 1 | A | 3 | |
| 21 | 71989-00 | BUS 1 ASSY (Long) | 1 | A | 3 | |
| 22 | 71990-00 | BUS 2 ASSY (Short) | 1 | A | 3 | |
| 23 | 84977-00 | SINGLE BOARD COMPUTER ASSY | 1 | A | 3 | |
| 24 | | | | | | |
| 25 | 84984-00 | POWER SUPPLY BOARD ASSY | 1 | A | 3 | |
| 26 | 71991-05 | CABLE PRINTER SAMPLER TO POWER BOARD ASSY | 1 | A | 3 | |
| 27 | 71045-00 | POWER SWITCH AND FUSES ASSY | 1 | A | 3 | |
| 28 | 71987-00 | ASSY HARNESS ELECTRON. - FANS | 1 | A | 3 | |
| | | & SPINNING CUP MOTOR | | | | |
| 29 | 71988-00 | SIGNAL HARNESS ASSY | 1 | A | 3 | |
| 30 | 71989-00 | ASSY HARNESS ELECTROVALV & COIL | 1 | A | 3 | |
| 31 | 67842-00 | LEFT COVER | 1 | A | 3 | |
| 32 | 98345-00 | SOLID STATE RELAY | 1 | A | 3 | |
| 33 | 99799-00 | FAN | 2 | A | 3 | |
| 34 | 67840-00 | FRONT COVER | 1 | A | 3 | |
| 35 | 95173-00 | PLUMBING PROTECTION | 1 | A | 3 | |
| 36 | 82321-00 | FILTER SUPPORT | 1 | A | 3 | |
| 37 | 82327-00 | CYLINDER SUPPORT | 1 | A | 3 | |
| 38 | 82323-00 | PLUMBING SUPPORT | 2 | A | 3 | |
| 39 | 98424-00 | COVER HINGE | 1 | A | 3 | |
| 40 | 98429-00 | RIGHT COVER HINGE | 1 | A | 3 | |
| 41 | 82473-00 | CLAMP PLUMBING | 1 | A | 3 | |
| 42 | 71302-00 | BOARD OUTSIDE | 1 | A | 3 | |
| 43 | 83183-00 | PLASTIC TIP | 1 | A | 3 | |
| 44 | 73789-01 | URETHANE TUBING - O.D. 1/I.D. .04 | 0.240 | A | 3 | Two Meters 0.220 / 0.000 |
| 45 | 39073-00 | PVC TUBING I.D.4/O.D.8 | 0.160 | A | 3 | |
| 46 | 39073-01 | PVC TUBING I.D.8/O.D.2 | 0.240 | A | 3 | Two Meters 0.220 / 0.000 |
| 47 | 39090-23 | TYGON TUBE I.D. .02/O.D. .093 | 0.240 | A | 3 | Two Meters 0.140 / 0.140 |
| 48 | 71992-00 | POWER CORD ASSY | REF | A | 3 | |
| 49 | 97810-00 | FOOT | 4 | A | 3 | |
| 50 | 77777-00 | SPACER | * | A | 3 | |
| 51 | 84908-02 | SELF ADHESIVE CLIP | 8 | A | C | |
| 52 | 84909-02 | SELF ADHESIVE CLIP | 4 | A | C | |
| 53 | 95371-07 | GROMMET | 3 | A | C | |
| 54 | 93270-18 | GROMMET | 1 | A | C | |
| 55 | 71814-00 | LABEL ELECTROVALVE | 1 | A | 3 | |
| 56 | 84983-00 | LATCH DETAIL | 1 | A | 3 | |
| 57 | 24573-00 | ASSY HOSE PROPANE GAS | 1 | A | 3 | |
| 58 | 98192-01 | PIPE FITTING | 1 | A | 3 | |
| 59 | 87845-00 | DILUTOR COVER | 1 | A | 3 | |
| 60 | 97290-00 | TRANSFORMER PROTECTION | 1 | A | 3 | |
| 61 | 97480-01 | THREADED MAGNET WASHER | 1 | A | 3 | |
| 62 | 97481-00 | MAGNET STOP | 1 | A | 3 | |
| 63 | 98787-00 | HEXAGONAL ENDS FEMALE | 8 | A | 3 | |
| 64 | 84999-44 | FILLING SCREW | 2 | A | 3 | |
| 65 | 98193-01 | FITTING | 1 | A | 3 | |
| 66 | 72107-00 | CHIMNEY GLASS | 1 | A | 3 | |
| 67 | 70189-00 | RING COVER | 1 | A | 3 | |
| 68 | 70188-00 | SCREEN | 1 | A | 3 | |
| 69 | 99454-00 | LABEL DATA PLATE | 1 | A | 3 | |
| 70 | 71795-00 | LABEL HIGH VOLTAGE(ARROW) | 1 | A | 3 | |
| 71 | 71863-00 | CAOUTCHOUC HOUSSE 40x2 | | A | 3 | |
| 72 | 98787-01 | HEXAGONAL ENDS MALE | 2 | A | 3 | |
| 73 | 82981-00 | INTERCONNECTION SCHEMATIC | REF | A | 3 | |
| 74 | 98436-00 | LABEL HIGH VOLTAGE | 1 | A | 3 | |
| 75 | 71040-00 | STOP PLATE | 1 | A | 3 | |

| ITEM | CODE | DESCRIPTION | Qty | | | NOTES |
|---|---|---|---|---|---|---|
| 76 | 97000-00 | PROPANE FUEL INST GRADE CYL | 1 | B | | |
| 77 | 66090-14 | BOTTLE | 1 | B | | |
| 78 | 98186-01 | CAP MONITOR | 1 | A | 2 | |
| 79 | | | | | | |
| 80 | 71886-00 | MOLYKOTE SELF ADHESIVE | | B | | |
| 81 | 99599-06 | C.S.B.H. SCREW M4 x 16 | 4 | B | | |
| 82 | 90763-07 | WASHER FLAT I. D. 4,3 | 4 | B | | |
| 83 | 99733-07 | C.S.B.H. SCREW BLACK M 3 x 16 | 4 | B | | |
| 84 | 99801-05 | WASHER FLAT BLACK I. D. 3,2 | 36 | B | | |
| 85 | 90763-05 | WASHER FLAT I. D. 3,2 | 64 | B | | |
| 86 | 90766-04 | WASHER LOCK I. D. 3,2 | 68 | B | | |
| 87 | 68000-05 | NUT HOT M 3 | 15 | B | | |
| 88 | 99588-05 | C.S.B.H. SCREW M3 x 12 | 8 | B | | |
| 89 | 99681-04 | SOCK HEAD CAP SCRUW M3 x 10 | 2 | B | | |
| 90 | 90765-05 | WASHER LOCK I. D. 4,3 | 10 | B | | |
| 91 | 99589-01 | C.S.B.H. SCREW M4 x 6 | 2 | B | | |
| 92 | 99588-01 | C.S.B.H. SCREW M3 x 6 | 4 | B | | |
| 93 | 99589-03 | C.S.B.H. SCREW M4 x 10 | 4 | B | | |
| 94 | 90766-06 | WASHER LOCK I.D. 6,3 | 1 | B | | |
| 95 | 99733-03 | C.S.B.H. SCREW BLACK M3 x 8 | 8 | B | | |
| 96 | 90765-03 | WASHER LOCK I. D. 3,2 | 4 | B | | |
| 97 | 99540-01 | NYLOK SCREW M3 x 8 | 2 | B | | |
| 98 | 90733-05 | WASHER NYLON I. D. 3,2 | 4 | B | | |
| 99 | 99682-01 | SOCK HEAD CAP SCRUW M3 x 8 | 2 | B | | |
| 100 | 99536-01 | SOCK HEAD CAP SCRUW M3 x 6 | 11 | B | | |
| 101 | 99735-01 | C.S.B.H. SCREW BLACK M4x8 | 2 | B | | |
| 102 | 99801-06 | WASHER FLAT BLACK I.D. 4,3 | 2 | B | | |
| 103 | 99588-01 | C.S.B.H. SCREW M3x6 | 10 | B | | |
| 104 | 99681-01 | SOCK. HEAD CAP SCRUW M3x6 | 8 | B | | |
| 105 | 68000-08 | NUT HEX M6 | 2 | B | | |
| 106 | 90763-10 | WASHER FLAT I.D. 6,3 | 2 | B | | |
| 107 | | | | | | |
| 108 | 90766-06 | WASHER LOCK I.D. 6,3 | 2 | B | | |
| 109 | 99599-02 | C.S.B.H. SCREW M4x8 | 2 | B | | |
| 110 | 99599-05 | C.S.P.H. SCREW M5,5x12 | 1 | B | | |
| 111 | 71816-00 | LABEL SET | 1 | B | | |
| 112 | 99142-03 | NYLON TUBE | 95 | B | 2,375 | |
| 113 | 99733-04 | C.S.B.H. SCREW M3x10 BLACK | 6 | B | | |
| 114 | 68914-00 | SAT 125V FUSE | 2 | B | | |
| 115 | 68915-00 | 6AT 125V FUSE | 1 | B | | |
| 116 | 68912-00 | 1.6AT 250V FUSE | 2 | B | | |
| 117 | 68916-00 | 0.8AT 250V FUSE | 1 | B | | |
| 118 | 68918-00 | 10AT 125V FUSE | 2 | B | | ONLY 110V |
| 119 | 68919-00 | BAT 125V FUSE | 1 | B | | ONLY 110V |
| 120 | 68896-01 | 3.15AT 125V FUSE | 2 | B | | ONLY 110V |
| 121 | 97505-70 | PRE-TEST PROCEDURE | REF | F | | |
| 122 | 97505-40 | BURN-IN PROCEDURE | REF | F | | |
| 123 | 97505-41 | FINAL TEST PROCEDURE | REF | F | | |
| 124 | 97505-42 | TEST RESULT SHEET PROCEDURE | REF | F | | |
| 125 | 97505-43 | ANALYTICAL SYSTEM, REF. PROCEDURE | REF | A | 2 | |
| 126 | 82081-00 | INTERCONNECTION SCHEMATIC | REF | A | 3 | |

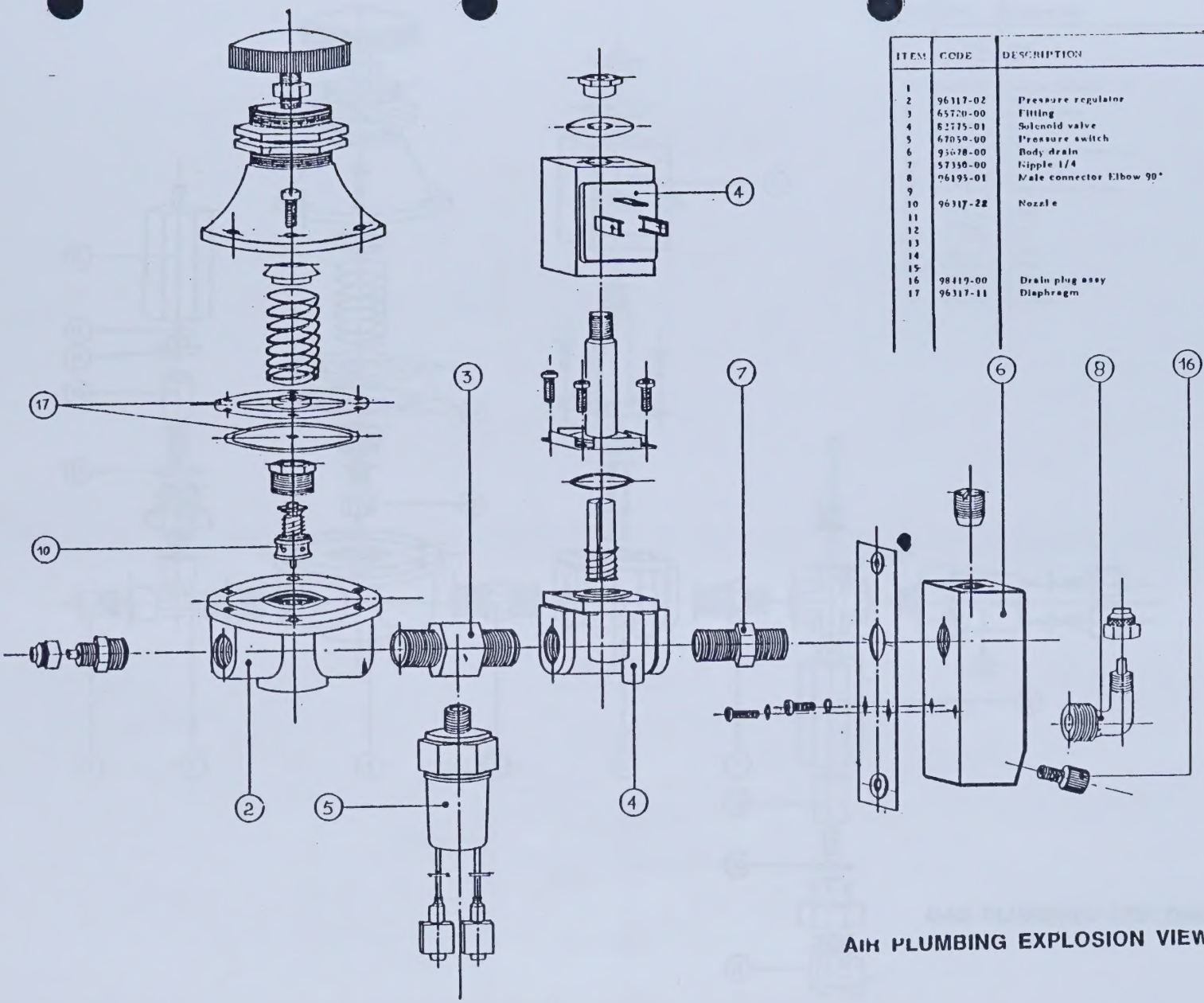


| ITEM | CODE | DESCRIPTION | Q. TY |
|---|---|---|---|
| 1 | | | |
| 2 | 96317-02 | Pressure regulator | 1 |
| 3 | 65720-00 | Fitting | 1 |
| 4 | 62775-01 | Solenoid valve | 1 |
| 5 | 67050-00 | Pressure switch | 1 |
| 6 | 93678-00 | Body drain | 1 |
| 7 | 57350-00 | Nipple 1/4 | 1 |
| 8 | 96195-01 | Male connector Elbow 90° | 1 |
| 9 | | | |
| 10 | 96317-22 | Nozzle | 1 |
| 11 | | | |
| 12 | | | |
| 13 | | | |
| 14 | | | |
| 15 | | | |
| 16 | 98419-00 | Drain plug assy | 1 |
| 17 | 96317-11 | Diaphragm | 1 |

AIR PLUMBING EXPLOSION VIEW

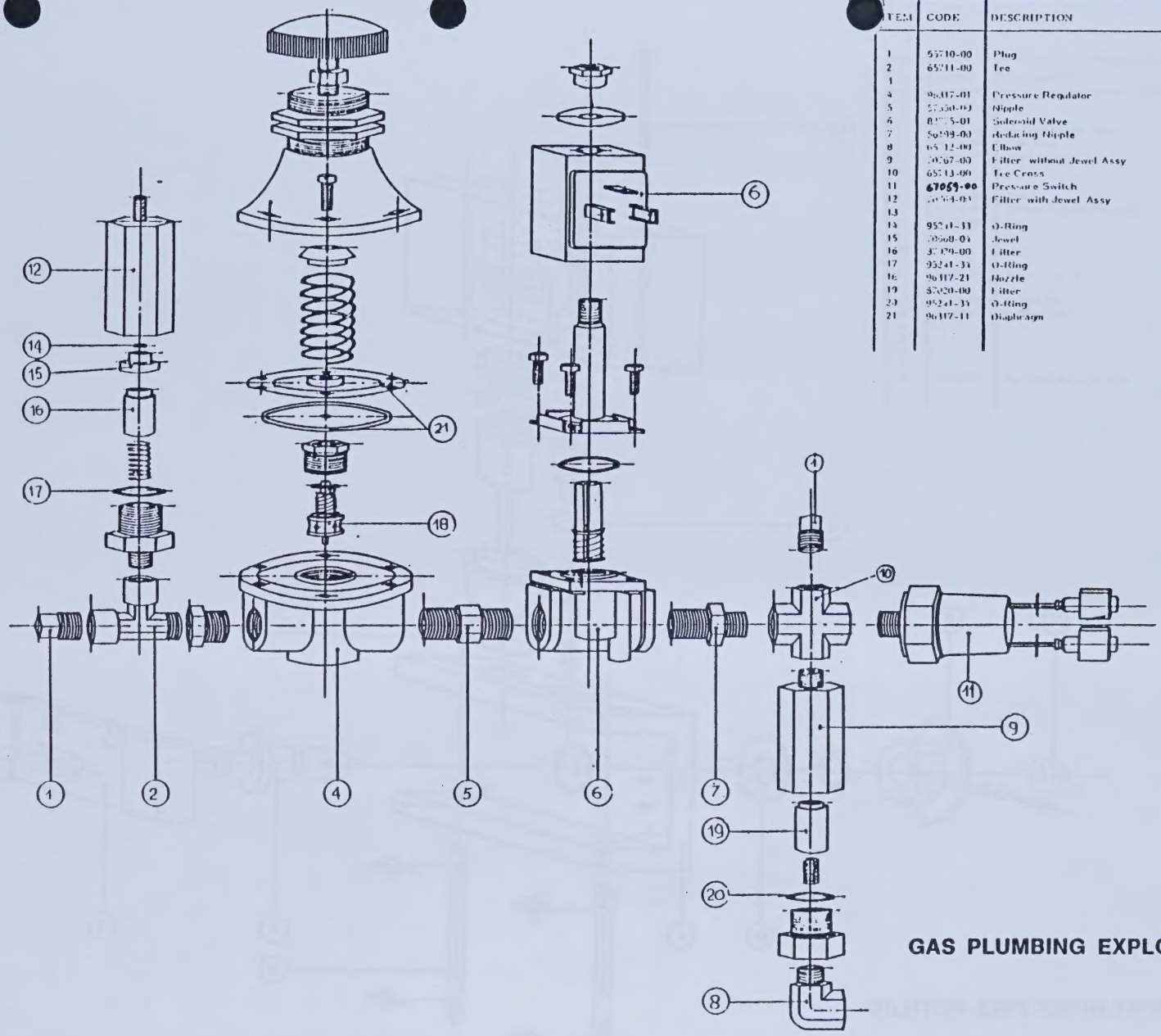

| ITEM | CODE | DESCRIPTION | |
|---|---|---|---|
| 1 | 55710-00 | Plug | 2 |
| 2 | 65711-00 | Tee | 1 |
| 3 | | | |
| 4 | 96117-01 | Pressure Regulator | 1 |
| 5 | 55350-00 | Nipple | 1 |
| 6 | 87775-01 | Solenoid Valve | 1 |
| 7 | 56199-00 | Reducing Nipple | 1 |
| 8 | 65712-00 | Elbow | 1 |
| 9 | 30367-00 | Filter without Jewel Assy | 1 |
| 10 | 65713-00 | Tee Cross | 1 |
| 11 | **67069-00** | Pressure Switch | 1 |
| 12 | 30364-00 | Filter with Jewel Assy | 1 |
| 13 | | | |
| 14 | 95241-33 | O-Ring | 1 |
| 15 | 30360-00 | Jewel | 1 |
| 16 | 30179-00 | Filter | 1 |
| 17 | 95241-33 | O-Ring | 1 |
| 18 | 96117-21 | Nozzle | 1 |
| 19 | 82020-00 | Filter | 1 |
| 20 | 95241-33 | O-Ring | 1 |
| 21 | 96117-11 | Diaphragm | 1 |

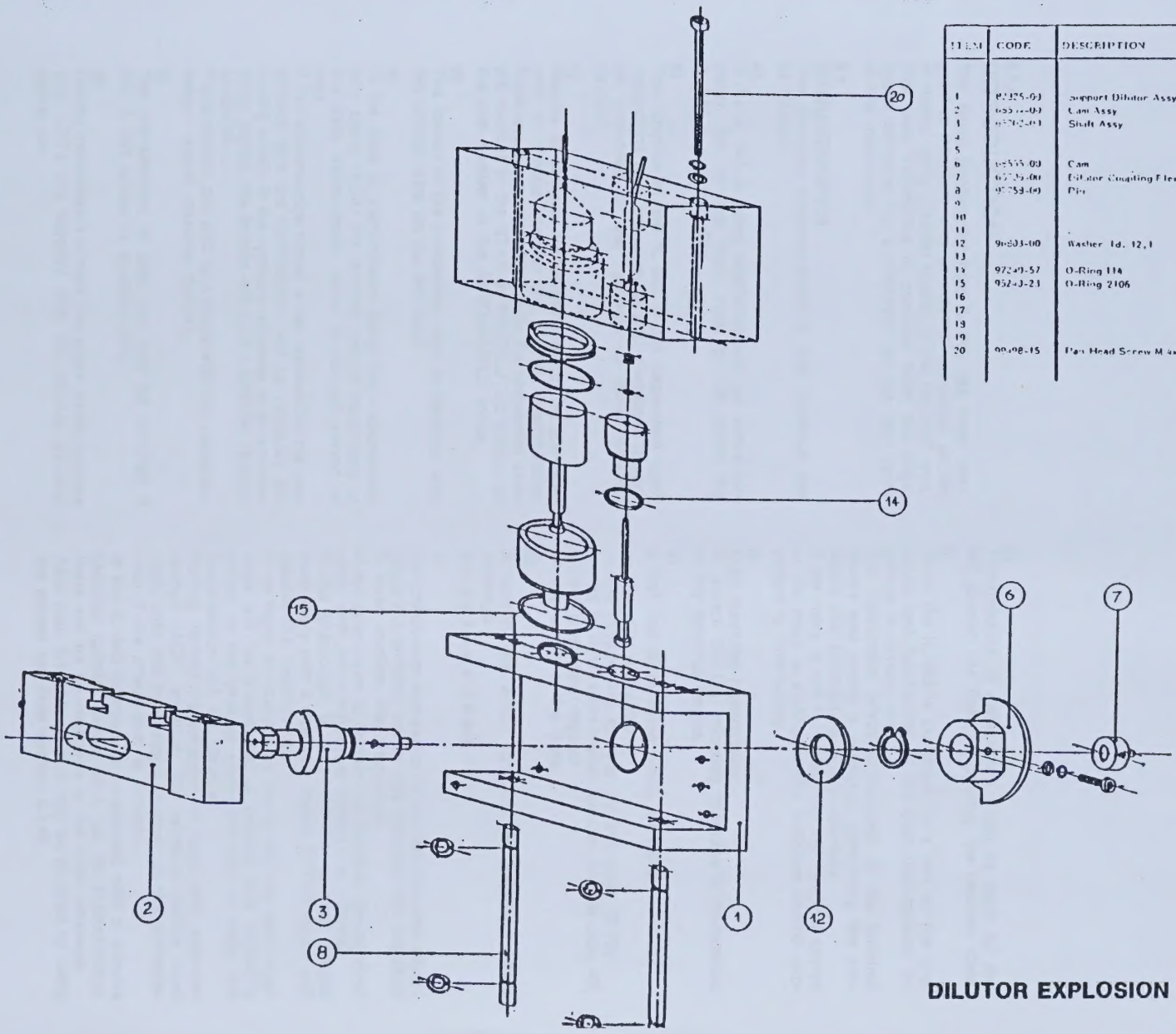


| ITEM | CODE | DESCRIPTION | Q. TY |
|---|---|---|---|
| 1 | 82325-00 | Support Dilutor Assy | 1 |
| 2 | 65[illegible]-00 | Cam Assy | 1 |
| 3 | 65[illegible]-00 | Shaft Assy | 1 |
| 4 | | | |
| 5 | | | |
| 6 | 65555-00 | Cam | 1 |
| 7 | 65[illegible]-00 | Dilutor Coupling Flex Assy | 1 |
| 8 | 97[illegible]-00 | Pin | 2 |
| 9 | | | |
| 10 | | | |
| 11 | | | |
| 12 | 96803-00 | Washer Id. 12,1 | 1 |
| 13 | | | |
| 14 | 97240-57 | O-Ring 114 | 1 |
| 15 | 95240-23 | O-Ring 2106 | 1 |
| 16 | | | |
| 17 | | | |
| 18 | | | |
| 19 | | | |
| 20 | 99498-15 | Pan Head Screw M 4x50 | 2 |

**DILUTOR EXPLOSION VIEW**

# SECTION EIGHT — IL 943 F.F. INTERFACE RS232C

8.1.0
## INTRODUCTION

The flame photometer type IL 943 has been designed to interface with an external computer, printer or video, using a serial output of the RS 232C type. The data transmitted is provided from the single board computer via a connector on the rear panel of the instrument.

8.1.1
**CHARACTERISTICS**

The principle characteristics of this interface are as follows:

**a)**
If the IL 943 is being interfaced with an active terminal, the terminal itself must be ON when the IL 943 is switched ON.

**b)**
The function of the IL 943 is not dependent upon commands from the terminal and, therefore, cannot be controlled by the computer or other terminal device.

**c)**
Results of samples transmitted cannot be identified with an unique number (eg. Patient Identification Number), but are identified with the sequential sample number in the STAT or PREDILUTED modes or the cup number in the AUTOSAMPLE mode.

**d)**
The format of the transmitted data is identical with the printed data on the 943 itself.

**e)**
In the case of transmission using the « acknowledge » signal (ACK) the terminal device must reply to the data transmission within a defined period of time.
If the acknowledge signal is not received in the prescribed time the transmission will be repeated following which, in the continue absence of an acknowledge signal, the printer will print « ERROR TRANSMISSION ».
Transmission can also take place with the « acknowledge » signal disabled (NACK).

**f)**
The transmission of data can only be effected if the IL 943 printer is enabled (ON).

**g)**
During transmission of data, the touch panel displays and LED's are blocked with the display decimal points on.

**h)**
Transmission of data takes place as soon as the 943 printer has finished printing the relevant data.

**i)**
When the IL 943 is switched ON a test for the presence and functioning of the data transmission interface is carried out.
The instrument sends a message to the terminal device and awaits a response confirming the presence and functioning of the interface.
If the reply is not received from the terminal device or the reply is erroneous the interface control procedure is interrupted.

**l)**
Start message transmission.
At switch ON the following message is transmitted to the terminal device.

1)
a first line of 14 bytes which contains:
— the start character
— the progressive number (in this case 00 00)
— the IL instrument model number (in this case 43)
— the command/request
— the length of the data

2)
a second line which contains the following ASCII message:
A A A A A A A A A A A A

3)
the check-sum expressed in two hexadecimal digits.
Once the terminal device has received this message it must confirm the check-sum.
If the check-sum is correct the terminal device must reply with the progressive number, ie. !ØØØØ.
If the check-sum is incorrect the terminal device must reply with 4 question marks (!????) which will disable the transmission.
If no reply is received by the IL 943 the start message will be transmitted a second time following which, in the case of continued lack of reply, the transmission will be disabled.
During normal transmission of data, with acknowledbge (ACK) enabled, the terminal device must reply with the progressive number of the transmission if the check-sum is correct.

**If the IL 943 interface is connected with a passive terminal (printer, video, etc.), i.e. no acknowledge, there will be no response to the Start message. After that, the transmission may be enabled by using the printer key (see section 8.5.4).**

m)

At installation the following characteristics of the data transmission may be set:

1) Transmission speed — 110-150-300-600-1200 baud
2) Parity Even/odd — or no parity
3) Number of bits per character — 7 or 8
4) ACK/NACK procedure
5) The message start character — : or *

8.2.0

## IL 943 TRANSMISSION SPECIFICATION

This section describes the details of the RS232C interface used for the flame photometer type IL 943. The first part describes the hardware.whilst in the second part the details of the software are given.

8.2.1

### HARDWARE DESCRIPTION

a)

The instrument has an interface which allows for connection either to an indipendent computer or a passive terminal (printer, video, etc).
The interface is of the DTE (Data Terminal Equipment) type.
The following table shows the characteristics of this interface as used in the IL 943.

| | |
|---|---|
| Parity | Yes (Odd or Even)/NO |
| Baud Rate | 110 ÷ 1200 |
| Number of data bits/ character | 7 or 8 |
| Number of transmission stop bits | 1 |
| All data is in ASCII code | |

b)

The following table shows the pins used in the connector (25 pin Delta Connector) which is on the rear panel of the 943, with their function or particular use as required by the IL 943.

| Pin | Function | Notes |
|---|---|---|
| 1 | Chassis ground | |
| 2 | Tx data | Transmitted data to computer |
| 3 | Rx data | Received data from computer |
| 4 | RTS (request to send) | to computer (NOT USED) |
| 5 | CTS (clear to send) | 10 KOhm pull up from computer (NOT USED) |
| 6 | DSR (data set ready) | from computer (NOT USED) |
| 7 | Signal ground | |
| 20 | DTR (data terminal ready) | 10 KOhm pull up to computer (NOT USED) |

c)

**Cabling diagrams computer output**

The figure below shows the method of connection between the IL 943 output and a terminal device of either the DCE or DTE type.

**IL 943 Computer Interface**
(DTE.Femaie Connector)

**External Computer or Data Management System**
(DCE, Female Connector)

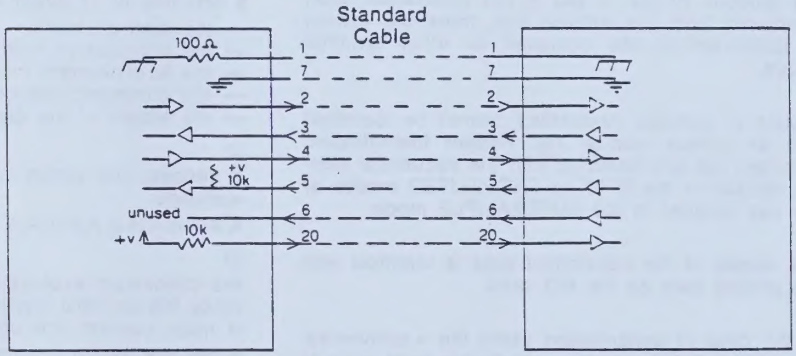


**Other DTE Device (e.g.. External Printer)**
(DTE, Male Connector)

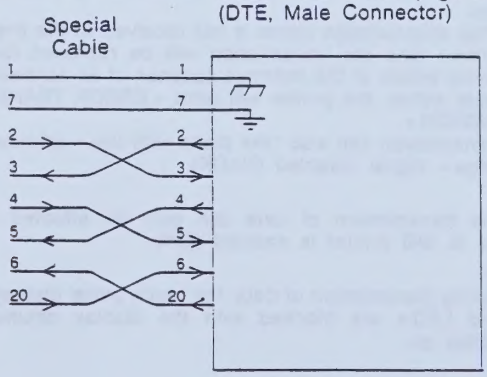

8.2.2.

**943 SOFTWARE PROTOCOL DESCRIPTION**

All transmissions towards a terminal device from the IL 943 DTE type interface are initiated with a particular « START MESSAGE » as described in the preceding section 8.1.1.

The transmission of data starts with a 10 byte block (start of data) followed by the length of data and the data itself.

A check-sum, expressed as two hexadecimal digits, concludes the transmission.

In the case that the transmission uses an ACK procedure, the terminal device must reply to the data transmission with an acknowledge signal in the case of correct receipt or a « non-acknowledge » signal in the case of erroneous data transmission. The form of transmission is shown in the table below:

| Bytes | Description |
|---|---|
| 0 | : or * start of header |
| 1 - 4 | transmission progressive number |
| 5 - 6 | Model Identification (43 for the IL 943) |
| 7 - 10 | Command request (always 0000) |
| 11 - 14 | Length of data record, not including header or check-sum |
| 15 - X | Data record (! and : are reserved) |
| X+1, X+2 | Check-sum (Check-sum + data record + header = 0). |

**Note:**

If the acknowledge sequence is enabled, the computer must transmit the progressive number of the transmission preceded by ! i.e. ! Sequence number) if the transmission is correct. In the case of erroneous transmission the terminal device must reply with the following message: !???? .

If the first transmission is received erroneously the 943 transmits the message a second time. If the result is still incorrect receipt of the transmission by the terminal device, the IL 943 printer will print the message « ERROR TRANSMISSION » and proceed to the next transmission.

In the IL 943 it is possible to enable or disable the ACK/NACK procedure.

8.3.0.

## 943 INTERFACE KIT LIST

For the installation of the interface as an optional all the hardware necessary is supplied in the single kit part no. 70731-00.

The kit contains the following items:

| Item | Code | Description | Q.ty |
|---|---|---|---|
| 1 | 82611-00 | SBC board w. RS232 C interface assy | 1 |
| 2 | 71593-00 | RS232 C interface harness assy | 1 |
| 3 | 99588-03 | Screw M3x0,5 L 8 mm | 2 |
| 4 | 96764-04 | Lock washer split id. 3,2 | 1 |
| 5 | 96767-11 | Flat washer i.d. 3,2 | 1 |
| 6 | 96765-03 | Washer internal lock i.d. 3,2 | 2 |
| 7 | 68060-04 | Nut M3x0,5 | 2 |
| 8 | 69944-01 | Clamp panduit | 1 |

For the new instruments ordered with interface, the kit is already fitted.

---

8.4.0

## 943 INTERFACE KIT MOUNTING DESCRIPTION

The following procedure describes, step by step, the installation of the interface to an IL 943.

During installation refer to the figure below;

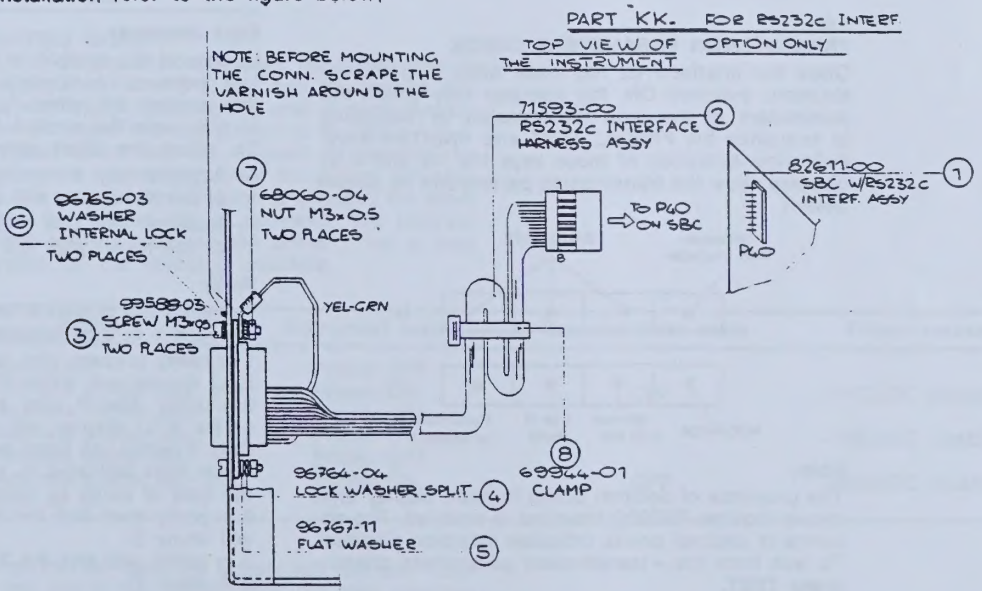

8.4.1
**MOUNTING PROCEDURE**

To install the interface kit proceed as follows:

a)
Remove the chimney cover and the screws which hold the instrument cover in place and remove same.

b)
Disconnect the upper and lower flat cables from the power and printer sampler boards. Disconnect P1c, P2c and P3c from the SBC and remove same. Fit the new SBC (1) contained in the kit.

c)
Remove the stop plate (item 75 drawing 33) which closes the opening in the rear panel of the instrument.
Fit the Delta connector of the harness assy (2) into the rear panel opening, using the screws and washers supplied in the kit.
Ensure that the green/yellow ground wire is fitted as shown in the figure and that the appropriate external area of the panel is free of laquer.

d)
Connect the other harness connector (2) to connector P40 on the SBC.

e)
Excess harness length may be clamped with the panduit clamp (8).
Ensure that the cable does not touch the ventilating fan on the rear panel of the instrument.

f)
Reconnect the upper and lower flat cables to the power board, SBC and Printer/Sampler board (P1 - P2), connect P3c to the SBC.

g)
Refit the instrument cover and place the chimney cover in position.
At this point the instrument is ready to operate with the interface kit connected to a terminal device (see following section).

8.5.0
## OPERATING DESCRIPTION

8.5.1
**TRANSMISSION PARAMETERS CHECK**

Once the interface kit has been fitted and the instrument switched ON, the operator may check the parameters of the data transmission by activating in sequence the **PREDIL**, **TEST** and **PRINTER** keys. Following activation of these keys the Na and K/Li displays show the transmission parameters as shown below:

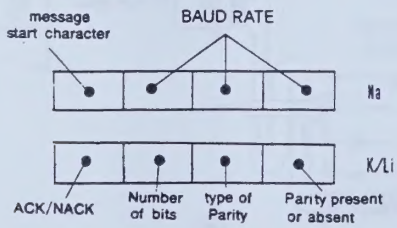


**Note:**

The presence of decimal points in each display digit shows that the RS232C Interface is enabled. The absence of decimal points indicates Interface disabled. To exit from the « transmission parameters check » press **TEST.**

8.5.2
**TRANSMISSION PARAMETERS SETTING**

During installation of the interface or a new instrument with interface, the Service Technician must set the transmission parameters to match the terminal device characteristics. After switch-ON the sequence of keys **« Predil-Test-Sample-t-08 »** must be pressed, after which, the displays show the current state of the transmission parameters as shown above (Transmission parameters check).
In this condition the keyboard numbering is as for the Special Test (see section 5.4.2). Even if it is only desired to change one parameter, all parameters must be entered in the following sequence:

Baud rate
Start character
Parity Yes/No
Parity Odd/Even
Number of bits per character
ACK/NACK

When setting of parameters starts all digits disappear, and reappear as each parameter is inserted.

**Note:**

All the parameters are determined by the terminal device, and the Service Technician should check the requirements of the terminal device before inserting the new parameters.

**Baud rate**

Activate the keyboard keys corresponding to the Baud Rate desired (110, 150, 300, 600 or 1200) noting that the final zero is omitted.
For Baud Rates with three digits the first key to be activated must be zero.
Thus the keys to be activated for each baud rate are as follows:

| Rate | Keys |
|---|---|
| 110 | 011 |
| 150 | 015 |
| 300 | 030 |
| 600 | 060 |
| 1200 | 120 |

**Start character**

In general the symbol: is to be used. However, certain personal computers (eg. Apple) already use this symbol for other functions.
In this case the symbol * may be used.
To select the **Start character** proceed as follows

— Activate key 1 = : (the most significant digit of the Na display will show ' ).
— Activate key 0 = * (the most significant digit of the Na display will show ≡).

**Parity**

To select the presence or absence of parity activate the keys 1 or 0 as follows:

1 = parity present (the least significant digit of the K/Li display will show P)
0 = parity absent (the two least significant digits of the K/Li display will show - -).
Only if parity has been selected, i.e. the least significant digit indicates P, is it necessary to introduce the type of parity as follows:
0 = parity even and the 2nd LSD of the K/Li display will show E.
1 = parity odd and the 2nd LSD of the K/Li display will show □.

**Number of bits per character**
Activate 7 or 8 to choose the number of bits. The number chosen will appear in the 3rd digit of the K/Li display.

**Ack /Nack**
To enable or disable the acknowledge procedure activate the 1 or 0 keys as follows:
1 = ACK = acknowledge enabled (the MSD of the K/Li display will indicate A).
0 = NACK = acknowledge disabled (the MSD of the K/Li display will indicate —).

To exit, from the transmission parameters setting program, activate **Test.** The keyboard them resumes its normal function.

8.5.3
**EXAMPLE**
Assuming the following transmission characteristics are to be set.

| Parameters | Keys to activate |
|---|---|
| Baud rate = 150 | 015 |
| Start character = : | 1 |
| Parity = odd | 11 |
| Number of bits = 7 | 7 |
| ACK/NACK = acknowledge | 1 |

The full transmission parameters setting sequence will be:

1) « **Predil - Test - Sample - t** » the keyboard is now in the test configuration.
2) 0 - 8 (**Prime-Autocal**) the keyboard is ready for parameter insertion.
3) 015 - 1 - 11 - 7 - 1 Parameters are set.
   The display will now show:

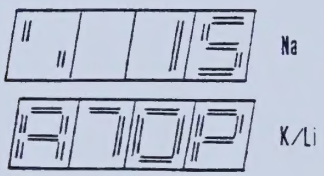


4) « **Test** » Exit from parameters setting routine.

8.5.4
**OPERATING MODE**
Once the parameters have been controlled and, if necessary, modified the IL 943 may be used in any mode, with transmission at the end of each measurement provided that the printer is in use.
The transmission may be enabled or disabled by activating the printer key. From the printer ON condition, the state of transmission is changed for every 2 times the printer key is activated, the relevant message being printed on the printer. This is best illustrated by the following example.

| Action | Instrument state | Transmissione state | Printer message |
|---|---|---|---|
| Switch-on | Printer OFF | | |
| Activate printer key | Printer ON | OFF | « RS232C Disabled » |
| Activate printer key | Printer OFF | | |
| Activate printer key | Printer ON | ON | « RS232C Enabled » |
| Activate printer key | Printer OFF | | |
| Activate printer key | Printer ON | OFF | « RS232C Disabled » |
| And so on | | | |

Thus as can be seen the printer key not only controls the use of the printer itself but also provides « enable » and « disable » for the transmission.

8.6.0.

# Drawings and diagrams index


| | | |
|---|---|---|
| 1 | SBC board with RS232C interface assy | 82611-00 |
| 2 | SBC with RS232 C interface schematic | 82085-00 |
| 3 | General Interconnection diagram | 82081-00 |
| 4 | Final assy | 72243-00 |

- THIS DOCUMENT CONTAINS PROPRIETARY INFORMATION OF INSTRUMENTATION LABORATORY SPA (IL). NONE OF WHICH SHALL BE COPIED, DISCLOSED OR USED IN WHOLE OR IN PART FOR ANY PURPOSE WITHOUT WRITTEN PERMISSION OF IL. THIS DOCUMENT IS SUBJECT TO RECALL BY IL AT ANY TIME -.

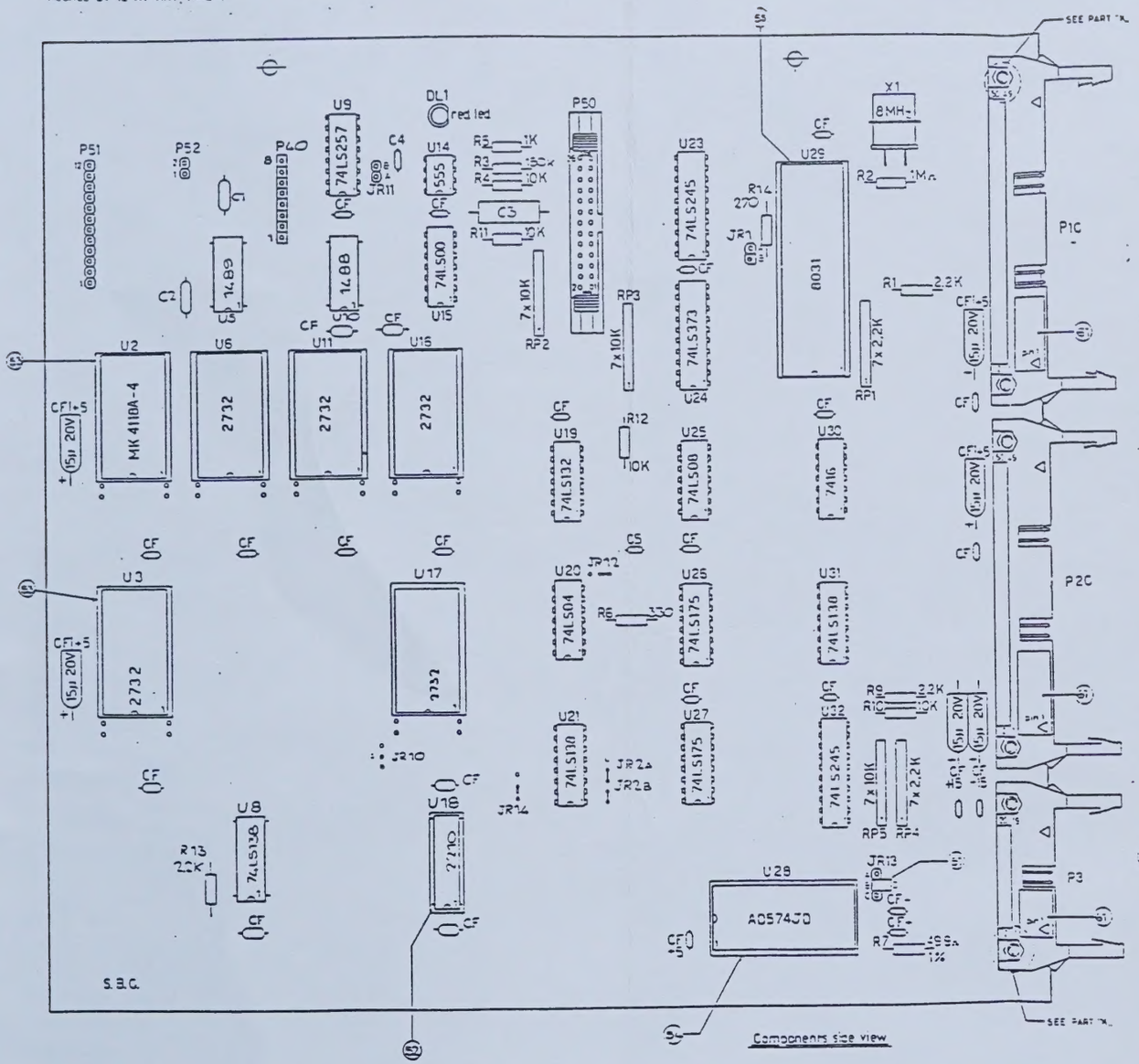


NOTE

1. CAPACITORS C2, C4, C5 AND JUMPERS OF ARE CERAMIC 0.1µF 50V
2. ALL RESISTORS ARE 1/4W 5% UNLESS OTHERWISE SPECIFIED
3. PIN 1 OF THE CONNECTORS P1C, P2C AND P3 IS INDICATED BY THE ARROW ON THE LABEL (see 58)
4. TO POLARIZE THE CONNECTORS, CUT PINS 3 OF P1C PIN 11 OF P2C AND PIN 14 OF P3 AND PIN 7 OF P40
5. MAKE JUMPERS JR2A-B, JR10, JR11, JR14, USING SOLID 22 AWG WIRE

| ITEM | CODE | DESCRIPTION | Qty | NOTES |
|---|---|---|---|---|
| 1 | [illegible] | [illegible] | 1 | |
| 2 | [illegible] | [illegible] | 1 | |
| 3 | [illegible] | [illegible] | 1 | |
| 4 | [illegible] | [illegible] | 1 | |
| 5 | [illegible] | [illegible] | 1 | |
| 6 | [illegible] | [illegible] | 1 | |
| 7 | [illegible] | [illegible] | 1 | |
| 8 | [illegible] | [illegible] | 1 | |
| 9 | [illegible] | [illegible] | 1 | |
| 10 | [illegible] | [illegible] | 1 | |
| 11 | [illegible] | [illegible] | 1 | |
| 12 | [illegible] | [illegible] | 1 | |
| 13 | [illegible] | [illegible] | 1 | |
| 14 | [illegible] | [illegible] | 1 | |
| 15 | [illegible] | [illegible] | 1 | |
| 16 | [illegible] | [illegible] | 1 | |
| 17 | [illegible] | [illegible] | 1 | |
| 18 | [illegible] | [illegible] | 1 | |
| 19 | [illegible] | [illegible] | 1 | |
| 20 | [illegible] | [illegible] | 1 | |
| 21 | [illegible] | [illegible] | 1 | |
| 22 | [illegible] | [illegible] | 1 | |
| 23 | [illegible] | [illegible] | 1 | |
| 24 | [illegible] | [illegible] | 1 | |
| 25 | [illegible] | [illegible] | 1 | |
| 26 | | | | |
| 27 | [illegible] | [illegible] | 1 | |
| 28 | 67221-10 | Polycarb cap 47nF 100 V | 1 | |
| 29 | 67227-02 | Ceramic capacitor 0.1 µF 50V | 15 | C2,C4,C5,C7-C14 |
| 30 | 67231-01 | Tantalum capacitor 10 µF 25V | 1 | C6 |
| 31 | [illegible] | [illegible] | 1 | |
| 32 | | | | |
| 33 | 72000-01 | 34 male connector PCB [illegible] | 1 | P1C-P3C |
| 34 | [illegible] | [illegible] | 1 | |
| 35 | [illegible] | [illegible] | 1 | |
| 36 | [illegible] | [illegible] | 1 | |
| 37 | [illegible] | [illegible] | 1 | |
| 38 | [illegible] | [illegible] | 1 | |
| 39 | [illegible] | [illegible] | 1 | |
| 40 | [illegible] | [illegible] | 1 | |
| 41 | [illegible] | [illegible] | 1 | |
| 42 | [illegible] | [illegible] | 1 | |
| 43 | [illegible] | [illegible] | 1 | |
| 44 | [illegible] | [illegible] | 1 | |
| 45 | [illegible] | [illegible] | 1 | |
| 46 | [illegible] | [illegible] | 1 | |
| 47 | [illegible] | [illegible] | 1 | |
| 48 | [illegible] | [illegible] | 1 | |
| 49 | [illegible] | [illegible] | 1 | |
| 50 | [illegible] | [illegible] | 1 | |
| 51 | [illegible] | [illegible] | 1 | |
| 52 | [illegible] | [illegible] | 1 | |
| 53 | [illegible] | [illegible] | 1 | |
| 54 | [illegible] | [illegible] | 1 | |
| 55 | [illegible] | [illegible] | 1 | |
| 56 | [illegible] | [illegible] | 1 | |
| 57 | [illegible] | [illegible] | 1 | |
| 58 | [illegible] | [illegible] | 1 | |
| 59 | [illegible] | [illegible] | 1 | |
| 60 | [illegible] | [illegible] | 1 | |
| 61 | [illegible] | [illegible] | 1 | |
| 62 | [illegible] | [illegible] | 1 | |
| 63 | [illegible] | [illegible] | 1 | |
| 64 | [illegible] | [illegible] | 1 | |
| 65 | [illegible] | [illegible] | 1 | |
| 66 | [illegible] | [illegible] | 1 | |
| 67 | [illegible] | [illegible] | 1 | |
| 68 | [illegible] | [illegible] | 1 | |
| 69 | [illegible] | [illegible] | 1 | |
| 70 | | | | |
| 71 | | | | |

Instrumentation Laboratory

SBC BOARD WITH RS 232 C
INTERFACE ASSY 82611-00

1

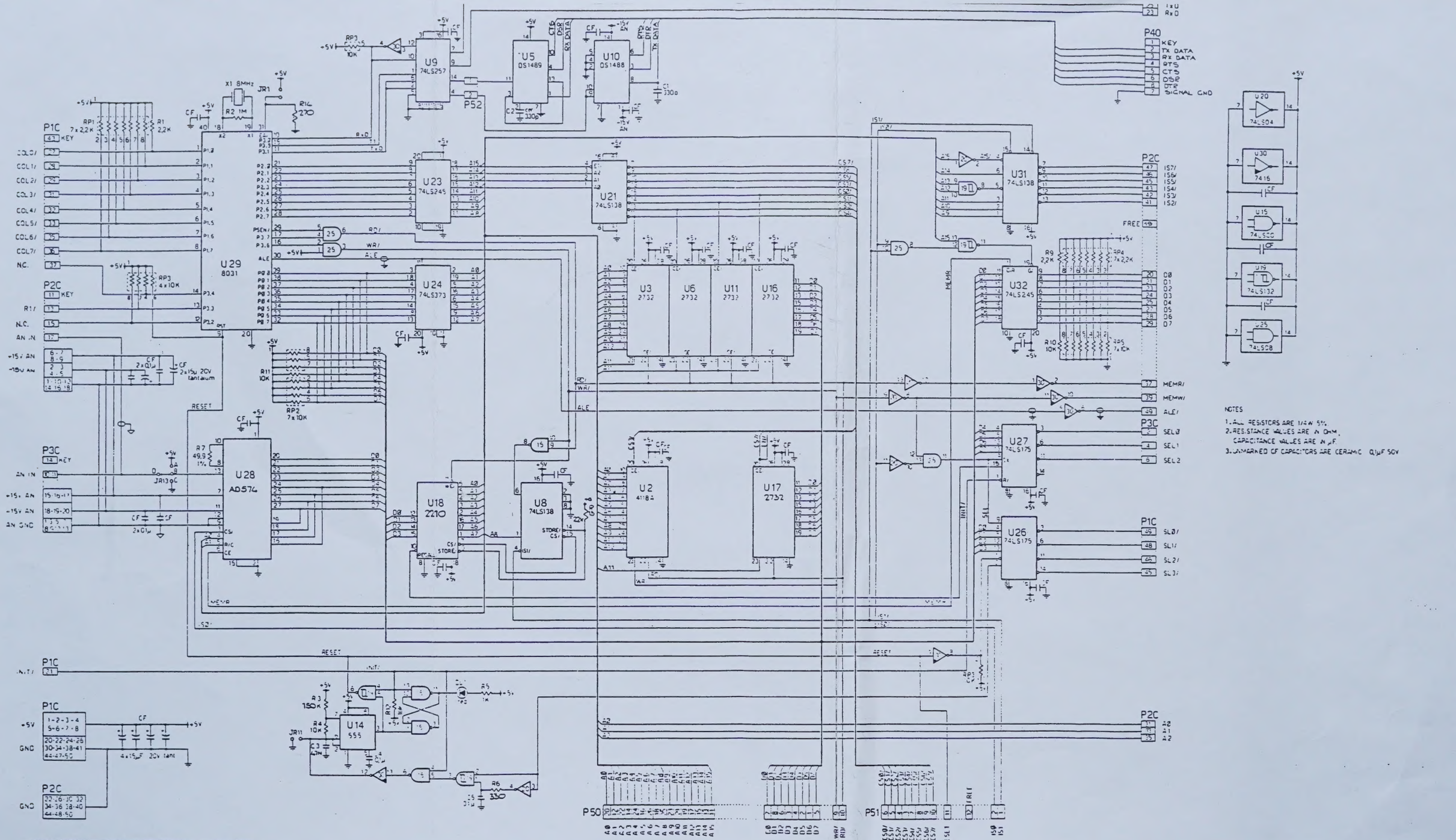


NOTES

1. ALL RESISTORS ARE 1/4 W 5%.
2. RESISTANCE VALUES ARE IN OHM, CAPACITANCE VALUES ARE IN µF.
3. UNMARKED CF CAPACITORS ARE CERAMIC 0.1µF 50V

- THIS DOCUMENT CONTAINS PROPRIETARY INFORMATION OF INSTRUMENTATION LABORATORY SPA (IL). NONE OF WHICH SHALL BE COPIED, DISCLOSED OR USED IN WHOLE OR IN PART FOR ANY PURPOSE WITHOUT WRITTEN PERMISSION OF IL. THIS DOCUMENT IS SUBJECT TO RECALL BY IL AT ANY TIME -

Instrumentation Laboratory

SBC WITH RS 232 C
INTERFACE SCHEMATIC 82085-00

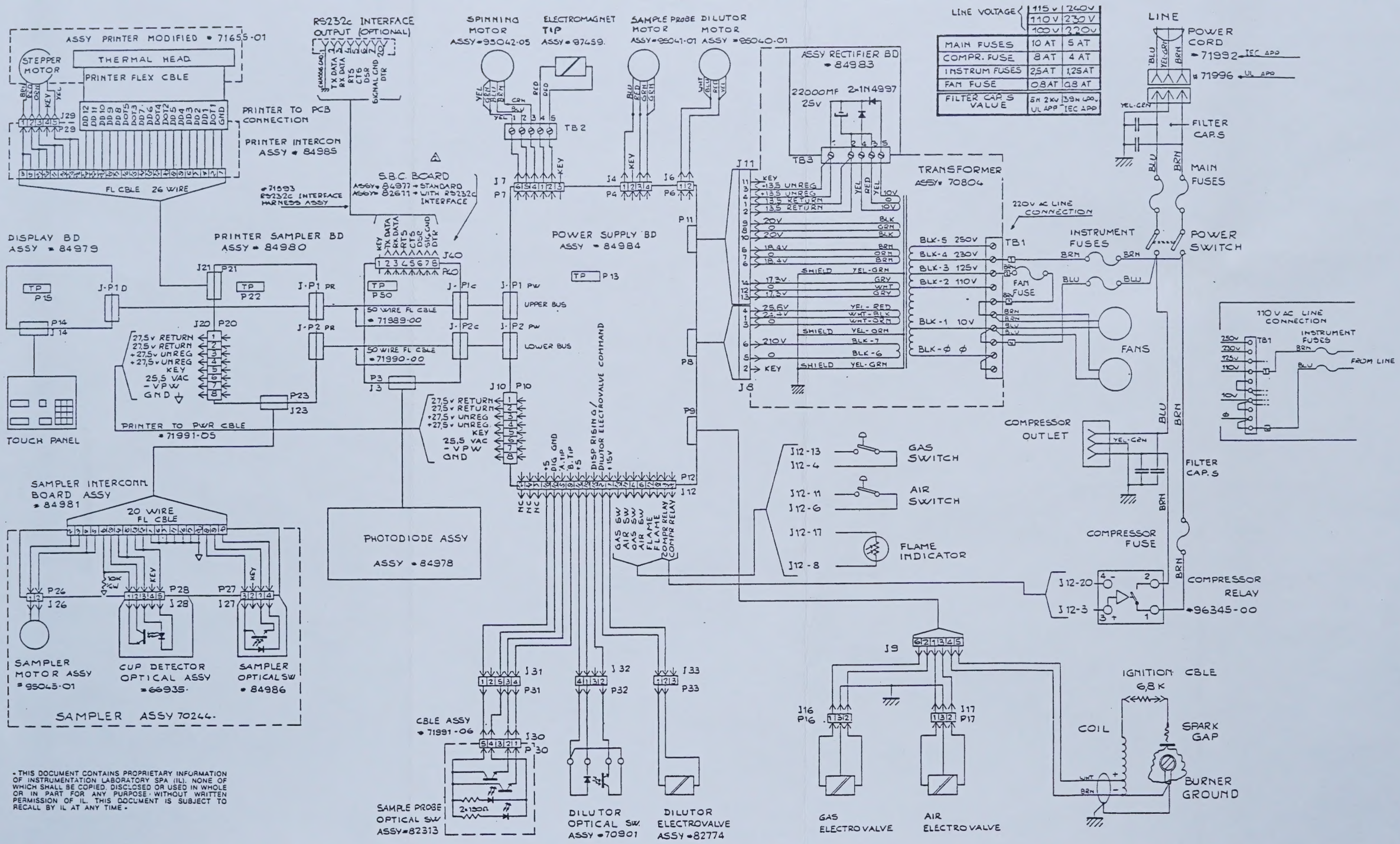


- THIS DOCUMENT CONTAINS PROPRIETARY INFORMATION OF INSTRUMENTATION LABORATORY SPA (IL). NONE OF WHICH SHALL BE COPIED, DISCLOSED OR USED IN WHOLE OR IN PART FOR ANY PURPOSE WITHOUT WRITTEN PERMISSION OF IL. THIS DOCUMENT IS SUBJECT TO RECALL BY IL AT ANY TIME -

Instrumentation Laboratory

GENERAL INTERCONNECTION DIAGRAM
82081-00

3

PERMISSION OF IL. THIS DOCUMENT IS SUBJECT TO RECALL BY IL AT ANY TIME -.

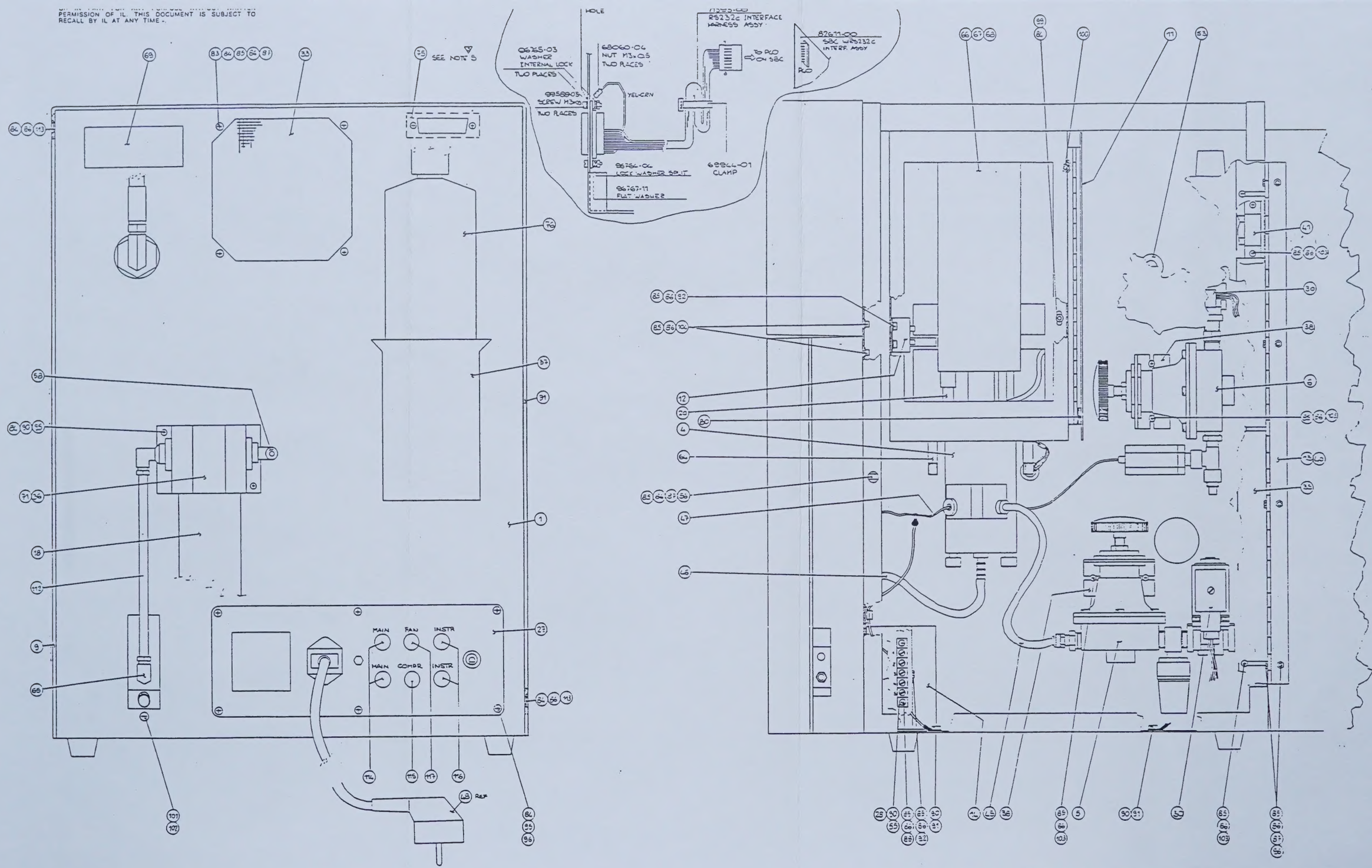

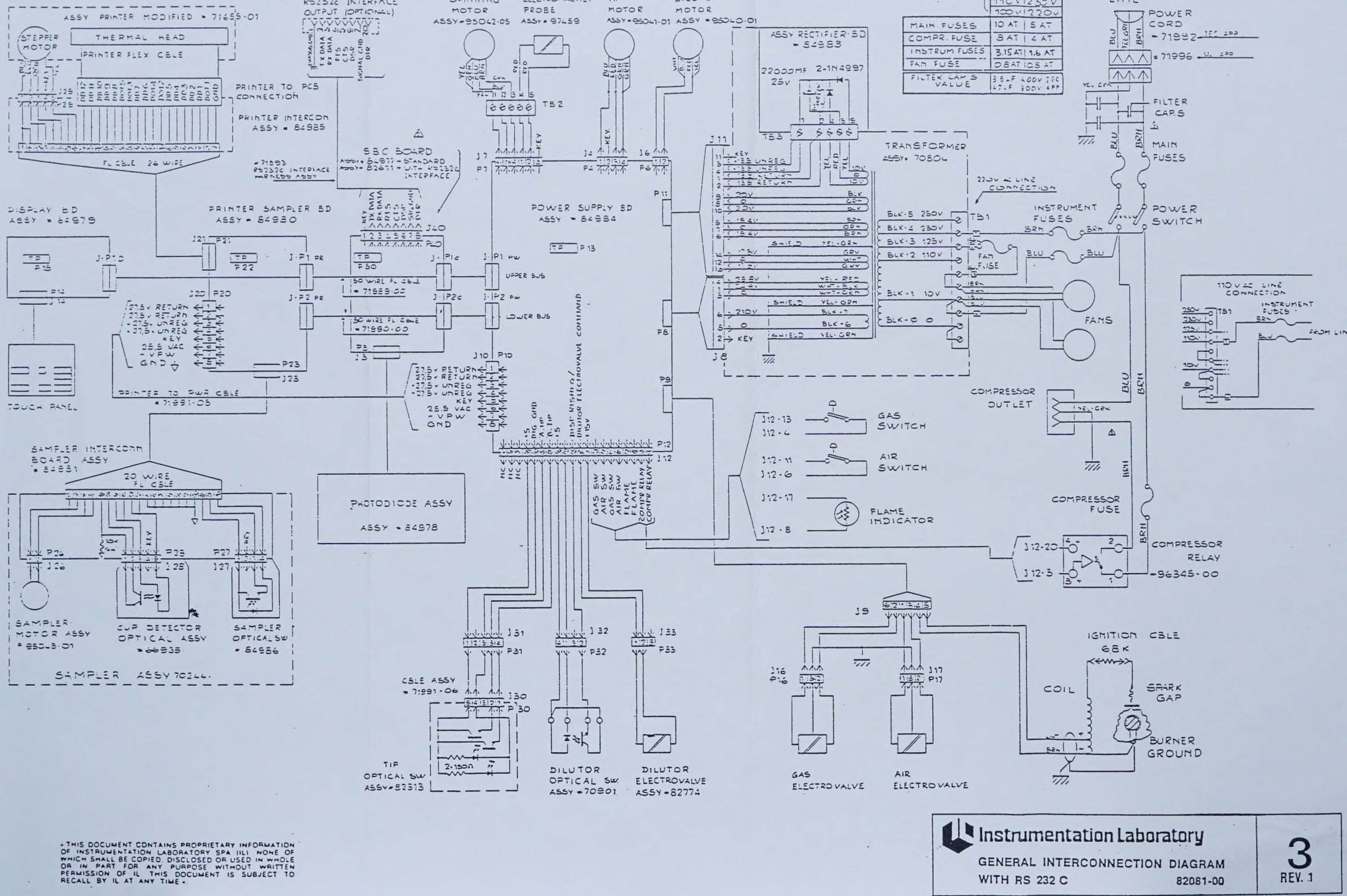


• THIS DOCUMENT CONTAINS PROPRIETARY INFORMATION OF INSTRUMENTATION LABORATORY SPA (IL) NONE OF WHICH SHALL BE COPIED, DISCLOSED OR USED IN WHOLE OR IN PART FOR ANY PURPOSE WITHOUT WRITTEN PERMISSION OF IL. THIS DOCUMENT IS SUBJECT TO RECALL BY IL AT ANY TIME.

Instrumentation Laboratory

GENERAL INTERCONNECTION DIAGRAM WITH RS 232 C

82081-00

3 REV. 1

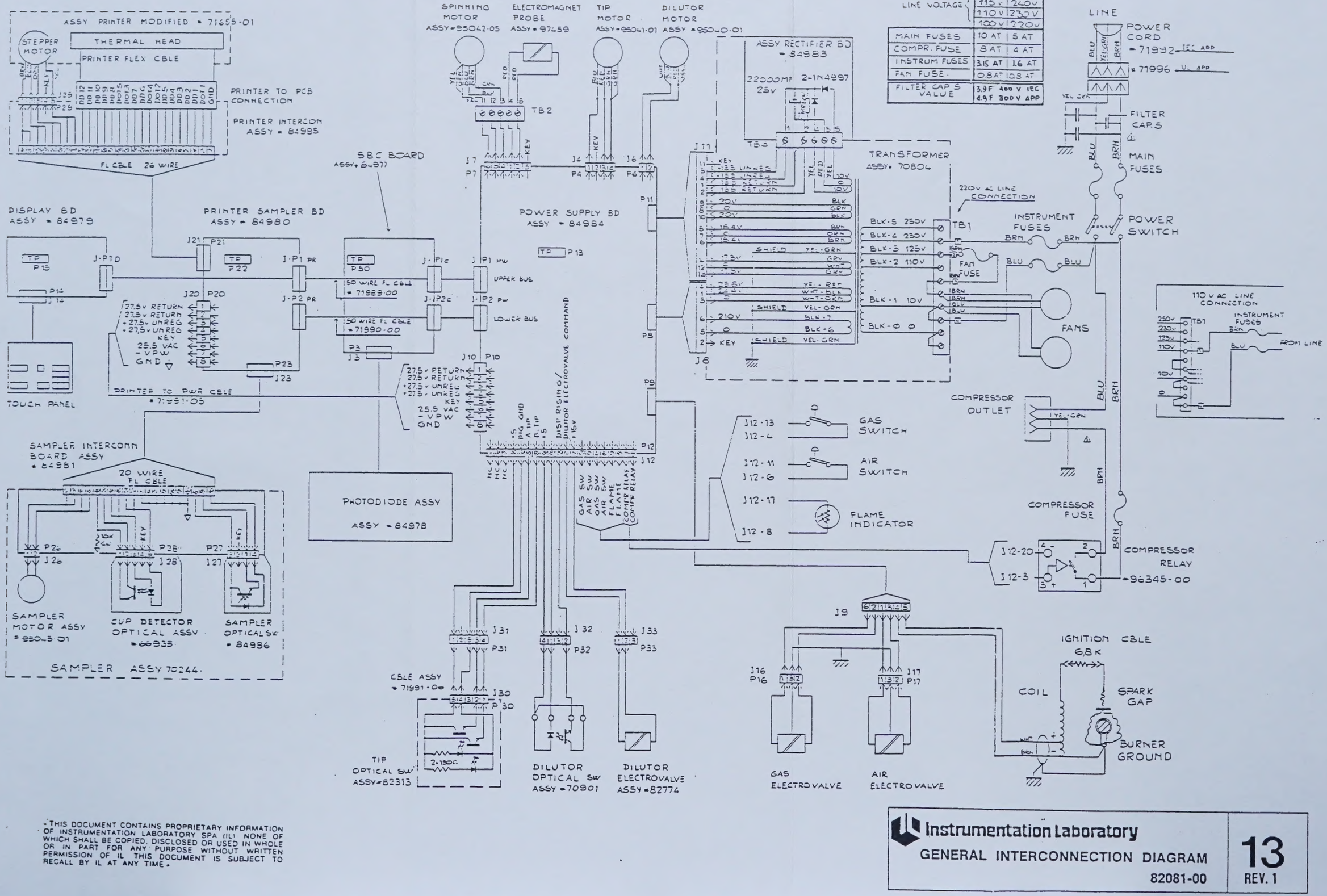


- THIS DOCUMENT CONTAINS PROPRIETARY INFORMATION OF INSTRUMENTATION LABORATORY SPA (IL) NONE OF WHICH SHALL BE COPIED, DISCLOSED OR USED IN WHOLE OR IN PART FOR ANY PURPOSE WITHOUT WRITTEN PERMISSION OF IL THIS DOCUMENT IS SUBJECT TO RECALL BY IL AT ANY TIME.

Instrumentation Laboratory

GENERAL INTERCONNECTION DIAGRAM

82081-00

13

REV. 1

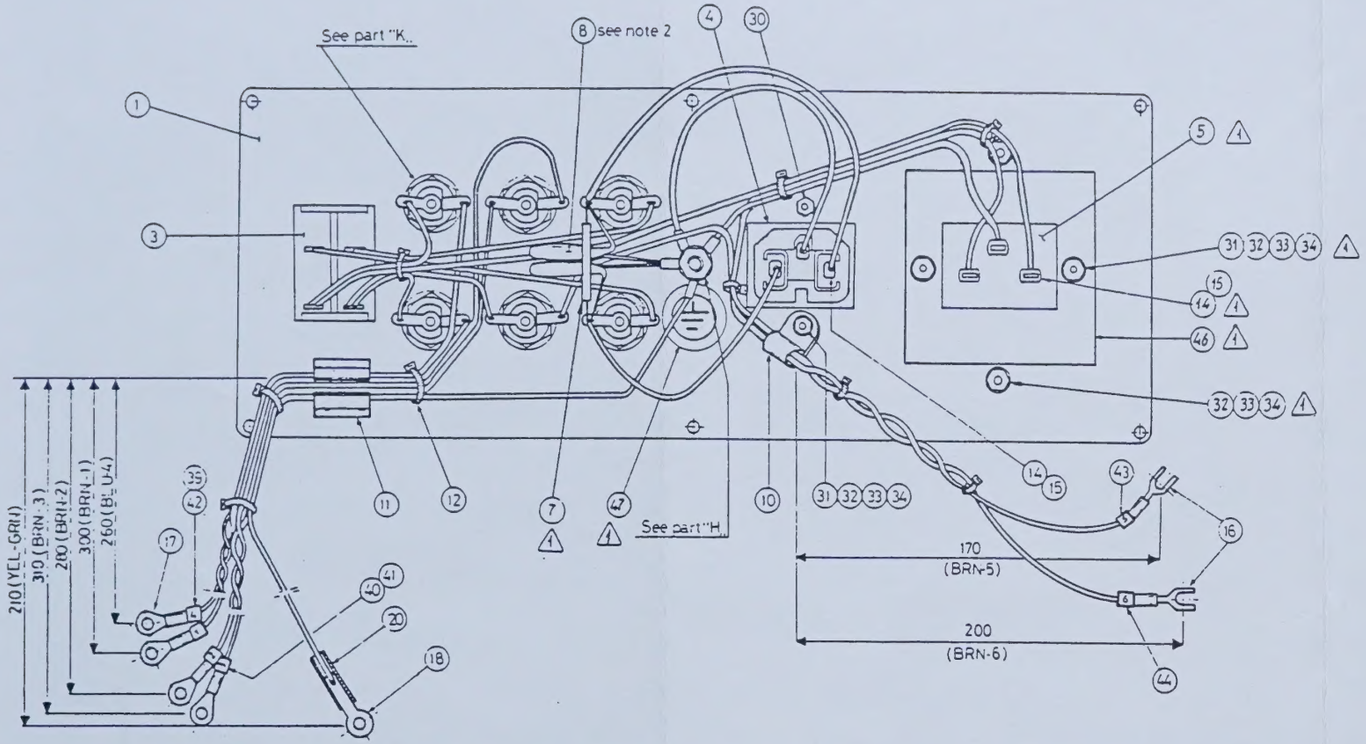


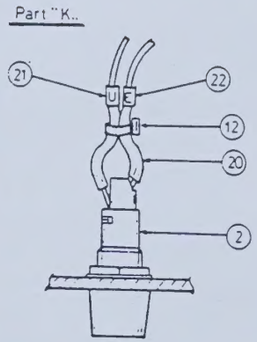


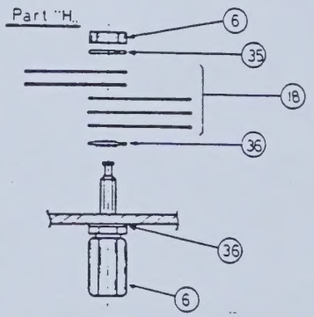


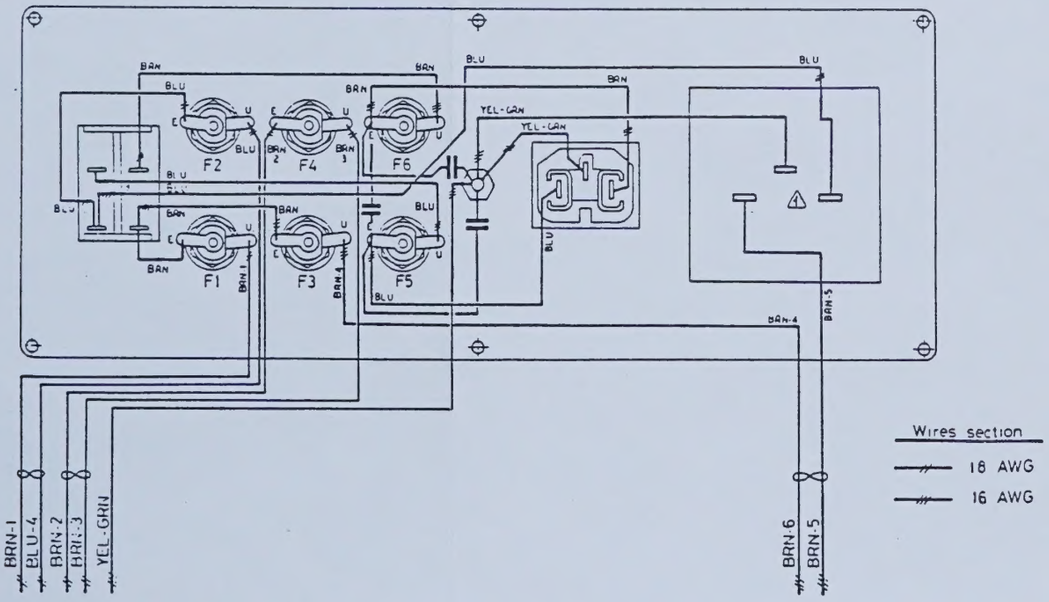


| | | | | | | |
|---|---|---|---|---|---|---|
| | 4 | 97644-00 | POWER PLUG 10A 250V | 1 | S | |
| ⚠1 | 5 | 47946-00 | POWER SOCKET FUSED 10A 250V | 1 | S | |
| | 6 | 66072-00 | POST BINDING METAL | 1 | S | |
| ⚠1 | 7 | 67336-01 | CAP POLYESTER SUPPRESSOR 0.047 µF | 1 | S | |
| ⚠1 | 8 | 67326-00 | CAPACITOR CERAMIC 3.9 nF 400V | 2 | S | |
| ⚠1 | 9 | | | | | |
| | 10 | 69921-01 | LOOPING CLAMP | 1 | S | |
| | 11 | 69982-03 | SELF-ADHESIVE CLIP TYPE «U» | 1 | S | SO 11/01-74 |
| | 12 | 69984-01 | CLAMP PATRIOT | 14 | S | |
| | 13 | | | | | |
| ⚠2 | 14 | 66423-06 | FEMALE FASTON 16.35 | 6 | S | |
| ⚠2 | 15 | 66427-02 | FASTON COVER | 6 | S | |
| | 16 | 66421-01 | FORK TERMINAL | 2 | S | |
| | 17 | 65440-05 | ROUND TERMINAL | 4 | S | |
| | 18 | 66413-13 | LUG SOLDER TERMINAL L=21mm | 5 | S | |
| | 19 | | | | | |
| | 20 | 99105-02 | RUBBER TUBING INSULATED I.D. 3÷2210 | 25 | S | |
| | 21 | 97297-21 | WIRE-MARKER «U» | 4 | S | |
| | 22 | 97297-05 | WIRE-MARKER «E» | 6 | S | |
| | 23 | | | | | |
| | 24 | 68701-08 | WIRE 18 AWG BLUE " " | 0.5M | S | |
| | 25 | 68701-03 | WIRE 18 AWG BRN " " | 0.5M | S | |
| | 26 | 68709-28 | WIRE 16 AWG YEL-GRN " " | 0.5M | S | |
| | 27 | 68703-28 | WIRE 16 AWG BLU CSA APPROVED " " | 0.5M | S | |
| | 28 | 68703-03 | WIRE 16 AWG BRN " " | 0.5M | S | |
| | 29 | | | | | |
| | 30 | 96606-12 | SCREW M3 L=6mm | 1 | S | |
| ⚠1 | 31 | 96606-04 | SCREW M3 L=10 mm | 3 | S | |
| | 32 | 96002-04 | NUT M3x0.5 | 6 | S | |
| | 33 | 96703-05 | FLAT WASHER I.D. 3,2 | 5 | S | |
| ⚠1 | 34 | 96704-04 | LOCK WASHER SPLIT I.D. 3.2 | 5 | S | |
| | 35 | 96702-05 | LOCK WASHER SPLIT I.D. 4.2 | 1 | S | |
| | 36 | 96704-04 | INT. LOCK WASHER I.D. 4.2 | 2 | S | |
| | 37 | | | | | |
| | 38 | | | | | |
| | 39 | 97296-01 | WIRE MARK 1 | 1 | S | |
| | 40 | 97296-22 | WIRE MARK 2 | 1 | S | |
| | 41 | 97296-03 | WIRE MARK 3 | 1 | S | |
| | 42 | 97296-24 | WIRE MARK 4 | 1 | S | |
| | 43 | 97296-05 | WIRE MARK 5 | 1 | S | |
| | 44 | 97296-06 | WIRE MARK 6 | 1 | S | |
| | 45 | 99113-05 | STERLING I.D. 1 | MT | D.(MM) | |
| ⚠2 | 46 | 71666-00 | ASSY PLATE | 1 | A | |
| ⚠2 | 47 | 74765-04 | LABEL PROTECTIVE EARTH | 1 | A | |
| | | | | | | |
| | | | | | | |
| | | | | | | |
| | | 61005-36 | MONITOR PROCESSING POWER SWITCH and FUSES ASSY | | S | |

NOTE

1. Cover each soldering with a rubber tubing insulator (see b.m. item 20)
2. Cover ceramic capacitor leads by sterling (see b.m. item 45)

- THIS DOCUMENT CONTAINS PROPRIETARY INFORMATION OF INSTRUMENTATION LABORATORY SPA (IL). NONE OF WHICH SHALL BE COPIED, DISCLOSED OR USED IN WHOLE OR IN PART FOR ANY PURPOSE WITHOUT WRITTEN PERMISSION OF IL. THIS DOCUMENT IS SUBJECT TO RECALL BY IL AT ANY TIME -.

Instrumentation Laboratory

POWER SWITCH AND FUSES ASSY

71045-00

16

REV. 1

| ITEM | CODE | DESCRIPTION | Qty | |
|---|---|---|---|---|
| 1 | 71161-03 | Fabrication board rectifier | 1 | S |
| 2 | 57425-00 | Diode IN4997 | 2 | S |
| 3 | 57356-03 | Diode pad | 2 | S |
| 4 | 66458-05 | Terminal strip 5 way | 1 | S |
| 5 | 56263-02 | WASHER INTERNAL LOCK | 2 | S |
| 6 | 67319-04 | Electrol capacitor 22000 µF 25V | 1 | S |
| 1 | 96387-37 | Resistor 1K OHM ½ Watt | 1 | S |
| 2 | 20131-00 | Spacer - in alternative ITEM 3 | 2 | A |

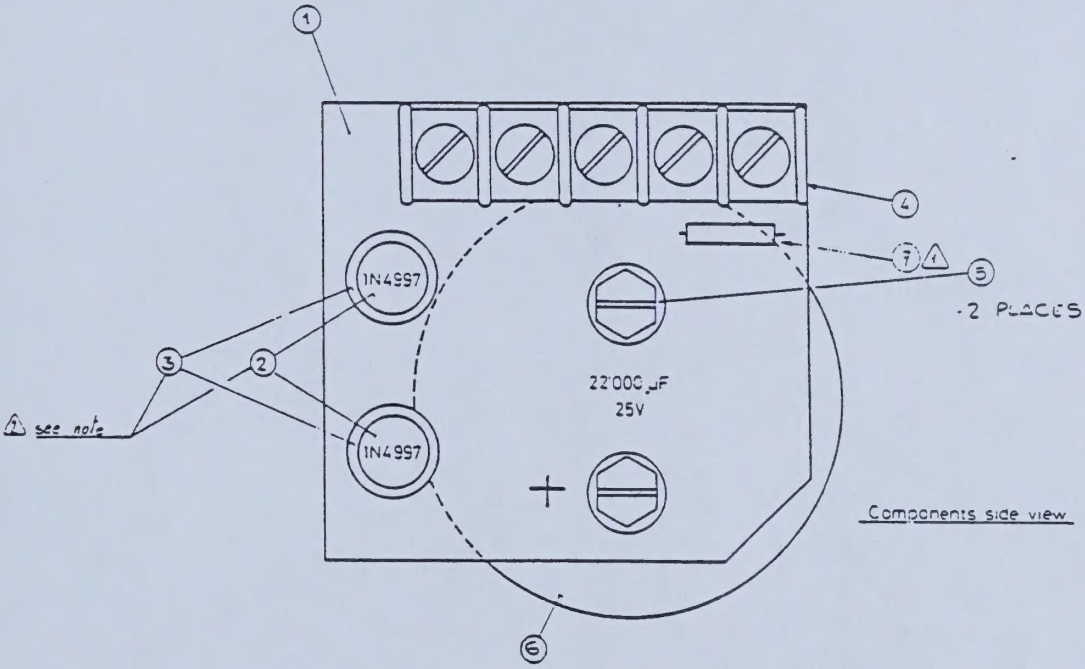


2 NOTE: FOR ALTERNATIVE MOUNTING

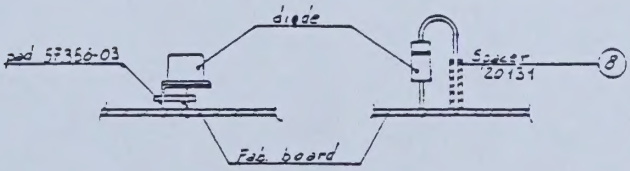


- THIS DOCUMENT CONTAINS PROPRIETARY INFORMATION OF INSTRUMENTATION LABORATORY SPA (IL). NONE OF WHICH SHALL BE COPIED, DISCLOSED OR USED IN WHOLE OR IN PART FOR ANY PURPOSE WITHOUT WRITTEN PERMISSION OF IL. THIS DOCUMENT IS SUBJECT TO RECALL BY IL AT ANY TIME.

Instrumentation Laboratory

5 V DIGITAL RECTIFIER BOARD ASSY

84983-00

32

REV. 1

## 943 I.E.C. APPROVAL

Starting from S/N 83050230 all the 50/60 Hz 943s (except U.L. version) have been updated to the IEC requirements as approved by the IMQ (Italian Safety Testing Agency) whose safety label appears on the rear panel.
The modifications involve the power switch and fuses and the 5V rectifier board assemblies.

A)

**Power switch and fuses assy** (P/N 71045-00):
— the schuko receptacle compressor outlet has been replaced with a new design power fixed socket and a matching free plug is added to the accessories with P/N 97947-00
— the two capacitors 3.9 nF 400 V on the compressor outlet are no longer present;
— a capacitor (47 nF 400 V) has been fitted between the line and neutral main wires.

B)

**5V rectifier board assy** (P/N 84983-003):
a 1K ∽ 1/2 w resistor has been fitted across the 22000 nF 25V capacitor leads.

For the 943 with IEC improvements, the enclosed drawings:

| | |
|---|---|
| — General Interconnection diagram | 82081-00 |
| — Power Switch and Fuses Assy | 71045-00 |
| — 5V Digital Rectifier Board Assy | 84983-00 |
| — General Interconnection Diagram with RS 232C | 82081-00 |

replace the drawings N. 13, N. 16 and N. 32 in the Section 7 and the drawing N. 3 in the Section 8.

# IL943 Operational Guide*

## CALIBRATION SOLUTION SELECTION

| CALIBRATION SOLUTION | SERUM Na/K | SERUM Li | URINE Na/K |
|---|---|---|---|
| Autocal Solution | 140/5 (97517-50) or 140/5/1 (33313) | 140/5/1 (33313) | 100/100 (35100) |
| Autozero Solution | distilled water | 140/5 (97517-50) | distilled water |

### Start Up

- Turn power on
- Open air valve if laboratory manifold air is in use
- Open the propane gas valve
- Depress the FLAME key. An automatic 3 minute temperature stabilization period will occur. Start up is complete when the Autocal indicator flashes
- Select a sample mode (Serum, Urine, Lithium) by depressing the appropriate key
- Select an operational mode (Prediluted, Autosample, Stat) by depressing the appropriate key
- Calibrate — using the appropriate Autocal and Autozero solution for the sample mode selected — follow calibration instructions for Prediluted, Autosample or Stat

### Autosample Calibrate/Operate

- Place cups containing the appropriate Autocal and Autozero solutions in the positions labeled on the sample plate — an intermediate Autocal is necessary only if more than 16 samples are to be run
- Load the sample plate with controls and specimens
- Place sample plate on system with the Start position opposite the optical switch
- Depress the Printer key
- Depress the Autocal key
- System will automatically perform a Set Cal and proceed to analyze the remainder of samples on the tray

### Prediluted Calibrate/Operate

- Dilute Autocal, Autozero, samples and controls 1 part to 100 parts with 1.5 mmol/L of Cesium diluent
- Position the sample aspirator in the prediluted clamp
- Depress the Prediluted key
- Present diluted Autocal directly to the sample aspirator — depress Autocal key
- When Autocal indicator is flashing fast, repeat previous step
- Present diluted Autozero directly to the sample aspirator — depress Autozero key – remove Autozero solution when sample indicator is lit
- Present diluted sample directly to the sample aspirator — depress Sample key – remove sample when sample Key remains lit

*For detailed operation instructions refer to the operational section of the IL943 Operator's Manual.

### Stat Calibrate/Operate

- Present the Autocal solution to the sample probe — depress the Autocal key
- When the sonalert is on and the Autocal key is flashing fast, remove the Autocal solution and depress the Autocal key
- Repeat the two previous steps
- Present the Autozero solution to the sample probe — depress the Autozero key
- When the sonalert is on and the Autozero key is flashing fast, remove the Autozero solution and depress the Autozero key
- Present the sample to the probe and depress the Sample key
- When the sonalert is on and the sample key is flashing fast, remove the sample and depress the Sample key

### Shutdown

- With the sample aspirator in the predilution position, aspirate 25 mL of a 1:50 dilution of the IL Rinse Solution (33110)
- Close the shut-off valve at the top of the propane cylinder
- Depress the Flame key — an automatic prime cycle takes place to flush the sample aspirator and injection nozzle, the air and gas solenoid will automatically be shut off
- Turn the main power switch on the back panel of the instrument off

### Preventive Maintenance

**Daily**

- Check Cesium level
- Check probe height
- Check for moisture in the filter bowl
- Clean the sample probe
- Wash the sample probe brush (Autosampler only)
- Check moisture bleed plug

**Monthly**

- Clean burner head
- Clean chimney
- Clean interference filters
- Replace sample aspirator tip (97334) and sample injection nozzle tubing (99090-25)
- Clean spin cup
- Check aspiration rate

**Every 3 months**

- Clean the nebulizer

Instrumentation Laboratory

113 Hartwell Avenue/Lexington, MA 02173-3190
Tel. 1-800-225-4040 (1-800-342-8856 in MA)
© 1986 Allied Corporation

142965-01
AW92402R1
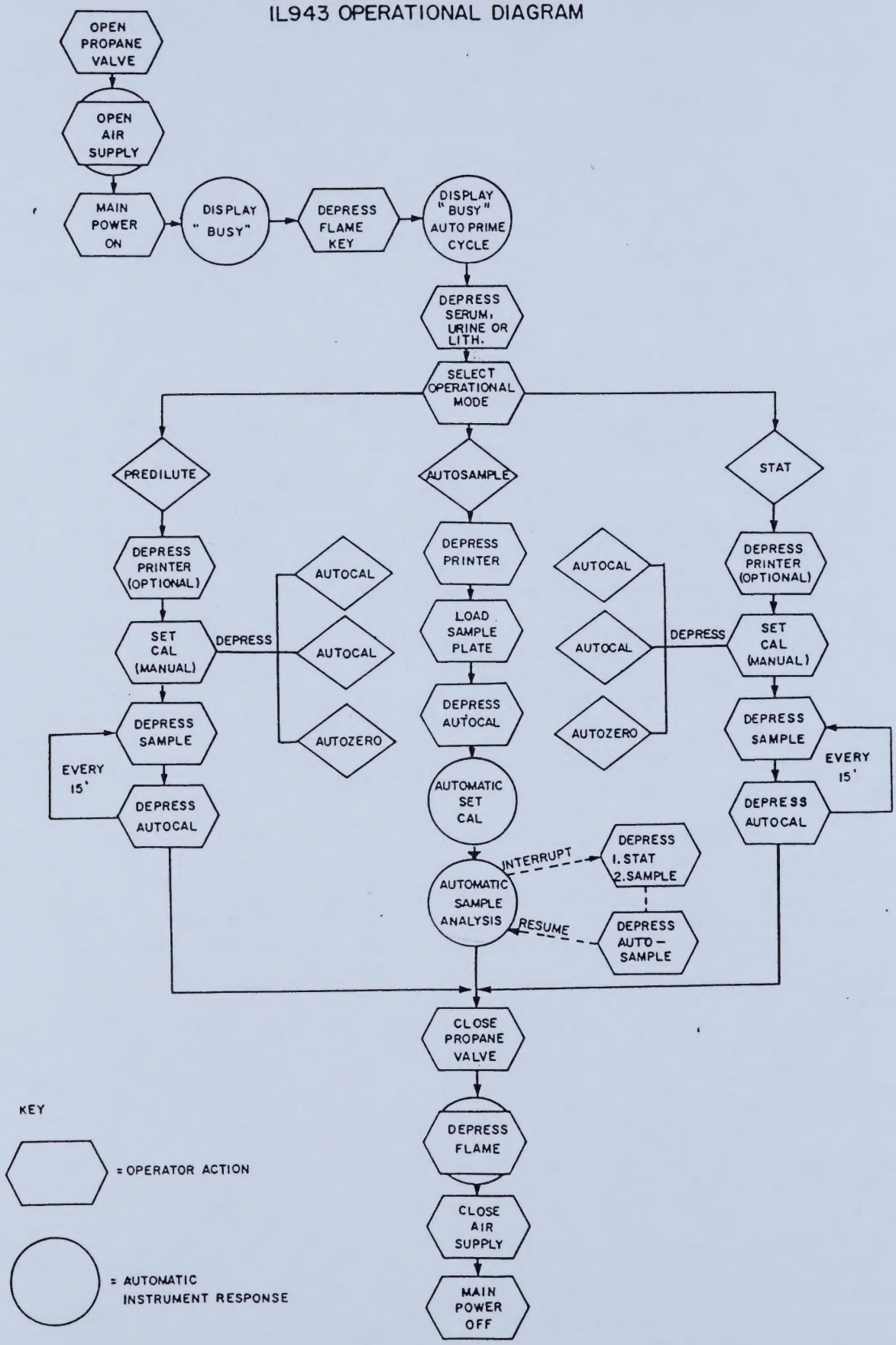
# IL943 OPERATIONAL DIAGRAM